4x4 Auto Roof Carrier Rack

Eatripway® 4x4 Auto Roof Carrier Rack Made in China factory, Lightweight aluminum alloy hardly detracts from the carrying capacity of your roof. The finish is resistant to stain, rust and inclement weather, offering durable and stable performance for a long time using. Welcome to contact get best quotation.

MODEL: BM-D05
SIZE: 120/132/138cm

Eatripway® auto **4x4 Auto Roof Carrier Rack**, the roof rack will provide you with a space-saving alternative for carrying cargo and equipment. You can fill a rooftop cargo carrier with wet or dirty gear to ensure that your trunk or cargo area remains clean and dry.
Note: Please make sure that side rails has been installed, or crossbars won't work.
The best price list wait for you inquire

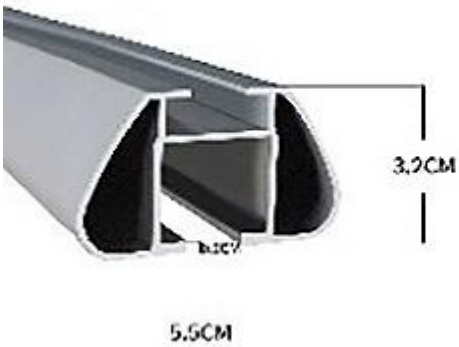

Place of Origin	Zhejiang,China
Model Number	9M D04
Material	aluminum alloy
Size	120cm/132cm/138cm
Max loading	90kg
Color	Silver

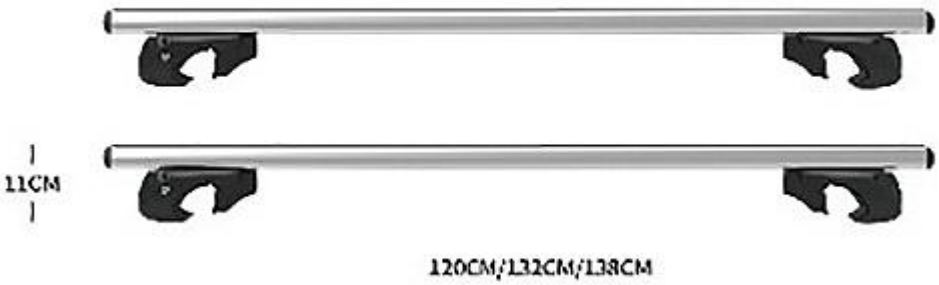

Product Feature And Application

Eatripway® **4x4 Auto Roof Carrier Rack**, Eatripway® is a leading brand that specializes in auto accessories and outdoor products. Along with thousands of motivated employees, Eatripway® is dedicated to providing our customers with tough equipment & tools at incredibly low prices. Today, Eatripway® has occupied markets of more than 200 countries with 10 million plus global members.

Product Detail

Eatripway® **4x4 Auto Roof Carrier Rack**
HIGH LOAD CAPACITY- The safety support cargo weight can reach 396LBS/180KG, which will not bend or warp the structural integrity of the roof racks. The crossbars will provide you with enough things to do on your trip.
HUMANIZED DESIGN- The Aerodynamic elliptical design of the roof crossbars effectively reduce wind resistance & noise, creating a quiet ride. They are also equipped with burglar-proof locks to ensure security.

SIMPLE INSTALLATION- The integrated strip offers exact measurements that correspond with instructions to ease installation and removal. No drilling or cutting is required.

MULTI-FUNCTIONAL DESIGN - The crossbars provide a perfect foundation for the installation of bike carriers, cargo boxes, and other rooftop accessories used for carrying kayaks, canoes, luggage, snowboards, skis bikes, fishing poles and so on