Topdiode Manufacturing Company Limited

Diode | Capacitors

Tel: +86 (0)769 8252 3211
Skype: topdiode
Email: info@topdiode.com
Website: www.topdiode.com

TCS Series 85°C V- chip Aluminum Electrolytic Capacitor

Designed for surface mounting on high density circuit board.
Operating with general temperature range -40~+85°C
Load life of 2000 hours
Comply with the RoHS directive

SPECIFICATIONS

Items	Characteristics
Operation Temperature Range	-40 ~ +85°C
Voltage Range	4 ~ 450V
Capacitance Range	0.1 ~ 6800μF
Capacitance Tolerance	±20% at 120Hz, 20°C

Leakage Current

Rated Voltage	6.3 ~ 100V		160 ~ 450V
Case size	∅4~∅10	∅12.5~∅16	∅6.3~∅16
Time	after 2 min. (application of rated voltage)	after 1 min. (application of rated voltage)	after 5 min. (application of rated voltage)
Leakage current	≤0.01CV or 3μA, whichever is greater	≤0.03CV or 4μA, whichever is greater	≤0.04CV+100μA, whichever is greater

Dissipation Factor (tan δ)

Measurement frequency : 120Hz, Temperature

Rated Voltage (V)		4	6.3	10	16	25	35	50	63	100	160~250	350~450
tan δ (max.)	∅4~∅10	0.42	0.28	0.24	0.20	0.14	0.12	0.12	0.10	0.10	0.20	0.25
	∅12.5~∅16	0.45	0.38	0.34	0.30	0.28	0.22	0.18	0.14	0.10	0.20	0.25

Stability at Low Temperature

Measurement frequency : 120Hz

Rated Voltage (V)			4	6.3	10	16	25	35	50~100	160~250	350~450
Impedance Ratio ZT/Z20 (max.)	∅4~∅10	Z(-25°C)/Z(20°C)	7	4	3	2	2	2	2	2	3
		Z(-40°C)/Z(20°C)	15	8	6	4	4	3	3	3	6
	∅12.5~∅16	Z(-25°C)/Z(20°C)	7	5	4	3	2	2	2	2	4
		Z(-40°C)/Z(20°C)	17	12	10	8	5	4	3	6	10

Load Life

After 2000 hours application of the rated voltage at 85°C, they meet the characteristics listed below.

Capacitance Change	Within ±20% of initial value (Within ±30% of initial value for 4V)
Dissipation Factor	200% or less of initial specified value
Leakage Current	initial specified value or less

Shelf Life

After leaving capacitors under no load at 85°C for 1000 hours, they meet the specified value for load life characteristics listed above.

Resistance to Soldering Heat

After reflow soldering and restored at room temperature, they meet the characteristics listed below.

Capacitance Change	Within ±10% of initial value
Dissipation Factor	initial specified value or less
Leakage Current	initial specified value or less

Marking

Black print on the case top.

DRAWING (Unit: mm)

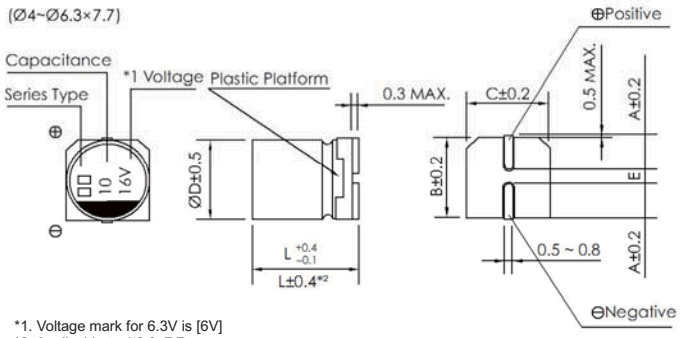

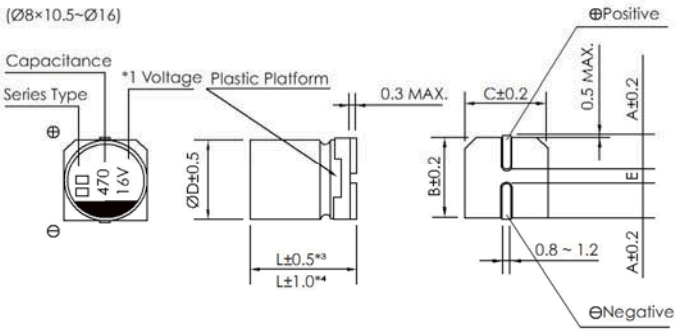

*1. Voltage mark for 6.3V is [6V]
*2. Applicable to ∅6.3×7.7
*3. Applicable to ∅8×10.5~∅10
*4. Applicable to ∅12.5~∅16

Tel: +86 (0)769 8252 3211
Skype: topdiode
Email: info@topdiode.com
Website: www.topdiode.com

DIMENSIONS (Unit: mm)

ØD x L	4 x 5.4	5 x 5.4	6.3 x 5.4	6.3 x 7.7	8 x 10.5	10 x 10.5	10 x 13.5	12.5 x 13.5	12.5 x 16	16 x 16.5
A	2.0	2.2	2.6	2.6	3.0	3.3	3.3	4.9	4.9	5.8
B	4.3	5.3	6.6	6.6	8.4	10.4	10.4	13.0	13.0	17.0
C	4.3	5.3	6.6	6.6	8.4	10.4	10.4	13.0	13.0	17.0
E ± 0.2	1.0	1.4	1.9	1.9	3.1	4.7	4.7	4.7	4.7	6.4
L	5.4	5.4	5.4	7.7	10.5	10.5	13.5	13.5	16.0	16.5

DIMENSIONS & MAXIMUM PERMISSIBLE RIPPLE CURRENT

•Case size ∅D×L(mm), ripple current (mA rms) at 85°C, 120Hz

WV / Code / µF		4 V		6.3V		10 V		16 V		25 V	
		Size	Ripple current	Size	Ripple current	Size	Ripple current	Size	Ripple current	Size	Ripple current
4.7	475									4 × 5.4	19
10	106							4 × 5.4	25	5 × 5.4 (4 × 5.4)	28 (20)
15	156							4 × 5.4	28	5 × 5.4	34
22	226			4 × 5.4	31	5 × 5.4 (4 × 5.4)	35 (28)	5 × 5.4 (4 × 5.4)	39 (28)	6.3 × 5.4 (5 × 5.4)	52 (35)
33	336	4 × 5.4	26	5 × 5.4 (4 × 5.4)	39 (31)	5 × 5.4 (4 × 5.4)	43 (32)	6.3 × 5.4 (5 × 5.4)	57 (40)	6.3 × 5.4 (5 × 5.4)	63 (42)
47	476	4 × 5.4	34	5 × 5.4 (4 × 5.4)	47 (36)	5 × 5.4	43	6.3 × 5.4 (5 × 5.4)	68 (44)	6.3 × 5.4	68
56	566	4 × 5.4	39	5 × 5.4	46	6.3 × 5.4	57	6.3 × 5.4	74	6.3 × 5.4	82
68	686	5 × 5.4	45	6.3 × 5.4 (5 × 5.4)	62 (52)	6.3 × 5.4	72	6.3 × 5.4	80	6.3 × 5.4	94
100	107	5 × 5.4	61	6.3 × 5.4 (5 × 5.4)	71 (55)	6.3 × 5.4 (5 × 5.4)	76 (70)	6.3 × 5.4	86	6.3 × 7.7	130
150	157	6.3 × 5.4	74	6.3 × 5.4	78	6.3 × 5.4	88	6.3 × 7.7	135	8 × 10.5 (6.3 × 7.7)	200 (130)
220	227	6.3 × 5.4	82	6.3 × 5.4	95	6.3 × 7.7	150	8 × 10.5 (6.3 × 7.7)	215 (150)	8 × 10.5	250
330	337	6.3 × 7.7	150	6.3 × 7.7	150	8 × 10.5	280	8 × 10.5	280	10 × 10.5 (8 × 10.5)	340 (310)
470	477	6.3 × 7.7	150	8 × 10.5 (6.3 × 7.7)	300 (150)	10 × 10.5 (8 × 10.5)	320 (300)	10 × 10.5 (8 × 10.5)	420 (330)	10 × 10.5	400
680	687	8 × 10.5	300	8 × 10.5	300	10 × 10.5	380	10 × 10.5	450	10 × 13.5	550
1000	108	8 × 10.5	330	10 × 10.5 (8 × 10.5)	430 (330)	10 × 10.5	450	12.5 × 13.5 (10 × 13.5) (10 × 10.5)	710 (550) (490)	12.5 × 13.5	820
1500	158	10 × 10.5	450	10 × 13.5 (10 × 10.5)	650 (450)	10 × 13.5	650	12.5 × 13.5	750	12.5 × 16	1000
2200	228	10 × 13.5 (10 × 10.5)	620 (480)	12.5 × 13.5 (10 × 13.5)	890 (720)	12.5 × 13.5	960	16 × 16.5 (12.5 × 16)	1150 (1000)	16 × 16.5	1250
3300	338	10 × 13.5	700	12.5 × 16 (12.5 × 13.5)	1000 (900)	16 × 16.5 (12.5 × 16)	1300 (1050)	16 × 16.5	1350		
4700	478	12.5 × 13.5	850	16 × 16.5	1400	16 × 16.5	1450				
6800	688	16 × 16.5 (12.5 × 16)	1350 (900)								

WV / Code / µF		35V		50V		63V		100V	
		Size	Ripple current	Size	Ripple current	Size	Ripple current	Size	Ripple current
0.1	104			4 × 5.4	1.0	4 × 5.4	1.0		
0.22	224			4 × 5.4	2.3	4 × 5.4	2.3		
0.33	334			4 × 5.4	3.5	4 × 5.4	3.5		
0.47	474			4 × 5.4	5.0	4 × 5.4	5.0		
1	105			4 × 5.4	10	4 × 5.4	10	4 × 5.4	10
1.5	155			4 × 5.4	12	4 × 5.4	12	6.3 × 5.4	15
2.2	225			4 × 5.4	15	4 × 5.4	15	6.3 × 5.4	20
3.3	335	4 × 5.4	18	4 × 5.4	18	5 × 5.4	20	6.3 × 7.7 (6.3 × 5.4)	45 (28)
4.7	475	4 × 5.4	20	5 × 5.4 (4 × 5.4)	23 (19)	5 × 5.4	23	6.3 × 7.7 (6.3 × 5.4)	50 (30)
10	106	5 × 5.4 (4 × 5.4)	30 (20)	6.3 × 5.4 (5 × 5.4)	34 (27)	6.3 × 7.7 (6.3 × 5.4)	55 (34)	8 × 10.5 (6.3 × 7.7)	110 (50)
22	226	6.3 × 5.4 (5 × 5.4)	54 (42)	6.3 × 5.4	60	8 × 10.5 (6.3 × 7.7)	140 (70)	10 × 10.5 (8 × 10.5)	180 (120)
33	336	6.3 × 5.4	60	6.3 × 7.7	85	8 × 10.5 (6.3 × 7.7)	160 (85)	10 × 10.5	190
47	476	6.3 × 5.4 (6.3 × 7.7)	70 (165)	10 × 10.5 (8 × 10.5) (6.3 × 7.7)	130 (110) (90)	10 × 10.5 (8 × 10.5)	230 (170)		

Tel: +86 (0)769 8252 3211
Skype: topdiode
Email: info@topdiode.com
Website: www.topdiode.com

DIMENSIONS & MAXIMUM PERMISSIBLE RIPPLE CURRENT

•Case size ∅D×L(mm), ripple current (mA rms) at 85°C, 120Hz

WV / Code / μF		35V		50V		63 V		100 V		160 V	
		Size	Ripple current	Size	Ripple current	Size	Ripple current	Size	Ripple current	Size	Ripple current
22	226									10 × 13.5	50
33	336									12.5 × 13.5	95
47	476									12.5 × 13.5 (16 × 16.5)	205 (240)
56	566	6.3 × 7.7	80	6.3 × 7.7	110	10 × 10.5	250				
68	686	6.3 × 7.7	110	8 × 10.5	170	10 × 10.5	260				
100	107	8 × 10.5 (6.3 × 7.7)	175 (120)	10 × 10.5 (8 × 10.5)	240 (200)	12.5 × 13.5 (10 × 13.5) (10 × 10.5)	380 (290) (280)	12.5 × 13.5	440	16 × 16.5	250
150	157	8 × 10.5	220	10 × 10.5	240	10 × 13.5	310				
220	227	10 × 10.5 (8 × 10.5)	310 (270)	10 × 13.5 (10 × 10.5)	400 (320)	12.5 × 13.5	580	16 × 16.5	700		
330	337	10 × 10.5	350	12.5 × 13.5 (10 × 13.5)	600 (420)	16 × 16.5 (12.5 × 16)	820 (720)				
470	477	12.5 × 13.5 (10 × 13.5) (10 × 10.5)	600 (530) (400)	16 × 16.5 (12.5 × 16)	850 (740)	16 × 16.5	950				
680	687	12.5 × 13.5	750	16 × 16.5	950						
1000	108	16 × 16.5 (12.5 × 16)	1100 (800)								

WV / Code / μF		200 V		250 V		350 V		400V		450 V	
		Size	Ripple current	Size	Ripple current	Size	Ripple current	Size	Ripple current	Size	Ripple current
3.3	335							10 × 13.5	40	10 × 13.5	40
4.7	475			10 × 13.5		10 × 13.5	85	10 × 13.5 (12.5 × 13.5)	45 (48)	10 × 13.5 (12.5 × 13.5)	42 (45)
10	106	10 × 13.5	75	10 × 13.5	75	12.5 × 13.5	105	12.5 × 13.5	50	12.5 × 13.5	55
22	226	12.5 × 13.5	105	12.5 × 13.5	105	16 × 16.5	130	16 × 16.5	85	16 × 16.5	85
33	336	12.5 × 13.5	120	16 × 16.5	135						
47	476			16 × 16.5	220						
100	107										

FREQUENCY COEFFICIENT OF ALLOWABLE RIPPLE CURRENT

Frequency			50Hz	120Hz	300Hz	1KHz	10KHz~
Coefficient	∅4 ~ ∅10	0.1 ~ 68μF	0.70	1.00	1.17	1.36	1.50
		100 ~ 3300μF	0.85	1.00	1.08	1.20	1.30
	∅12.5 ~ ∅16	~ 68 μF	0.75	1.00	1.35	1.57	2.00
		100 ~ 680μF	0.80	1.00	1.23	1.34	1.50
		1000 ~ 6800μF	0.85	1.00	1.10	1.13	1.15

■ Package Quantity

Size ∅D × L (mm)	Quantity per Reel	Reels in Box	Quantity in Box/Pcs	3 Inbox per cartons (pcs)
4 × 5.4/5.8	2,000	6	12,000	36,000
5 × 5.4/5.8	1,000	6	6,000	18,000
6.3 × 5.4/5.8	1,000	5	5,000	15,000
6.3 × 7.7	1,000	5	5,000	15,000
8 × 10.5	500	4	2,000	6,000
10 × 10.5	500	4	2,000	6,000
10 × 13.5	500	4	2,000	6,000
12.5 × 13.5	250	3	750	2,250
12.5 × 16	200/150*	3	600/450*	1,800/1,350*