SHIMGE®
for better life

General Catalogue

SHIMGE PUMP INDUSTRY (ZHEJIANG) CO., LTD.

Surface pumps

50Hz

Immediately join the Shimge Family by scanning:
https://www.shimgepump.com

SHIMGE PUMP INDUSTRY (ZHEJIANG) CO., LTD.
Add: Dayangcheng Industrial Zone, Daxi Town, Wenling City, Zhejiang Province, Ch
Tel: +86-576-86339960
Fax: +86-576-86337079
Email: admin@shimge.com

January 2024 Edition (No further notice will be given in case of content revisions)

CATALOG

Surface Pumps

Peripheral Pumps
- QB 01

Self-Priming Peripheral Pumps
- WZB 05

Automatic Self-Priming Peripheral Pumps
- PW 09
- PW-Z 12
- PW-F 16
- PZ 20

Centrifugal Pumps
- CPm 24
- SHF(m) 28
- 2SGP(m) 39
- SGT 43
- PXm 53
- PX-E 57
- PRm 61
- KSW 65
- PUM 68
- PTm 72
- CA 76
- WT 82

Self-Priming JET Pumps
- JET 86
- SGJW-S 91
- JET-G2 95
- PJ750M1 99

About Shimge

Founded in 1984 and headquartered in Daxi Town, Wenling City, Zhejiang Province, Shimge Pump Industry (Zhejiang) Co., Ltd. is a limited liability company specialized in the technical research and manufacturing of various pumps, control equipment, and other pump-related products. Shimge currently owns 6 major brands, 14 product lines, over 2,000 product specifications, and 13 subsidiaries.

Shimge's production base in HangZhou, Zhejiang Province

Shimge's production base in SanChiku, Wenling, Zhejiang Province

Shimge's casting parts production base in JiangSu Province

Shimge's casting production base in JiangXi Province

Shimge's casting production base in JiangSu Province

High Quality Production

FOR BETTER LIFE

Shimge sticks on the comprehensive innovation on R&D and production process which commits to improve the production process and efficiency.

On one hand, we strengthen the professional skill of workers by sustaining training, and on the other, we put into the robot automatic production machine instead of manual work. By those ways, we have not only reduced the manufacturing cost, but also improved the product quality and stability.

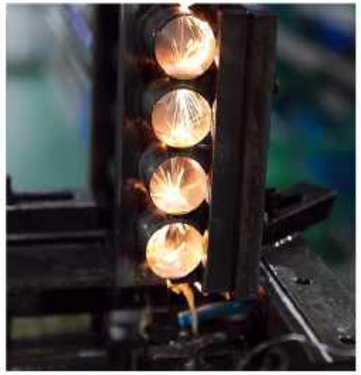

Strict Quality Control

FOR BETTER LIFE

Since its establishment, Shimge has always actively promoted comprehensive "lean" quality and environment management, and has currently passed ISO9001, ISO14001 and OHSAS18001 certification, introduced excellent performance management in line with GB/T 19580 and established a sound quality assurance system.

SHIMGE has equipped an industry-leading physicochemical testing center,
and its delivery performance inspection platform has reached a precision of grade B (grade 1) in the evaluation conducted by an authoritative agency.
In addition, its products have passed GS, CE and UL certification, and met the specifications of the RoHS Directive.

QB60G1

QB60L1/K1

QB

Performance Range

Max. Flow: 3.6m³/h
Max. Head: 60m

Application Limits

- Suction head up to 8m
- Liquid temperature up to +40℃
- Ambient temperature up to +40℃
- Max. Working pressure: 6bar
- Voltage fluctuation should not exceed 10% of rated value.
- pH: 6.5 to 8.5

Certificate

CE

Features

- Small size,high pressure
- Easy installation & maintenance
- Stainless Steel Inserts

Application Fields

- Suitable for transferring water without abrasive particles or other liquid whose properties are similar to water.
- Widely used in garden irrigation, vegetable greenhouse water supply, breeding industry water supply and drainage, various corollary equipment, etc.
- Insulation class: F

Optional Available On Request

- NSK bearing

Model Instruction

QB 60 G1/L1/K1

- G1/L1/K1 — Product Code
- 60 — Specification Code
- QB — Peripheral Pumps

Performance Curve

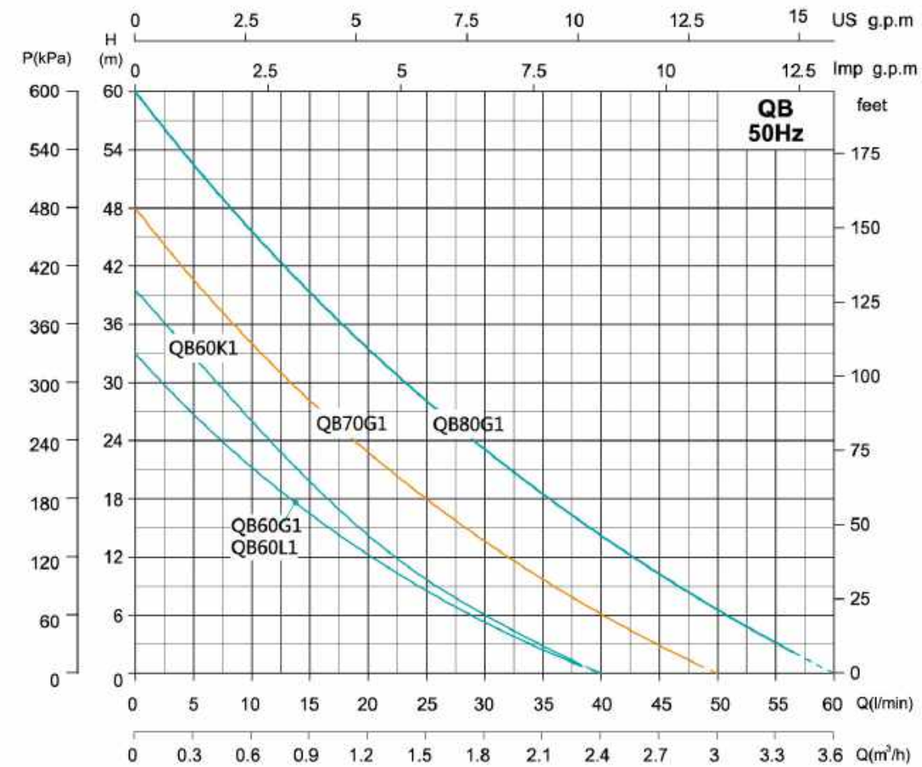

Model	Power		Max. Flow (m³/h)	Max. Head (m)	Head Range (m)	Max. Suction (m)
	kW	HP				
QB60G1	0.37	0.5	2.4	33	27~1	8
QB70G1	0.55	0.75	3	48	44~1.5	8
QB80G1	0.75	1	3.6	60	53~2.5	8
QB60L1	0.37	0.5	2.4	33	27~1	8
QB60K1	0.37	0.5	2.4	40	30~1.5	8

NOTE: 0.3m short-term without plug

Components & Materials

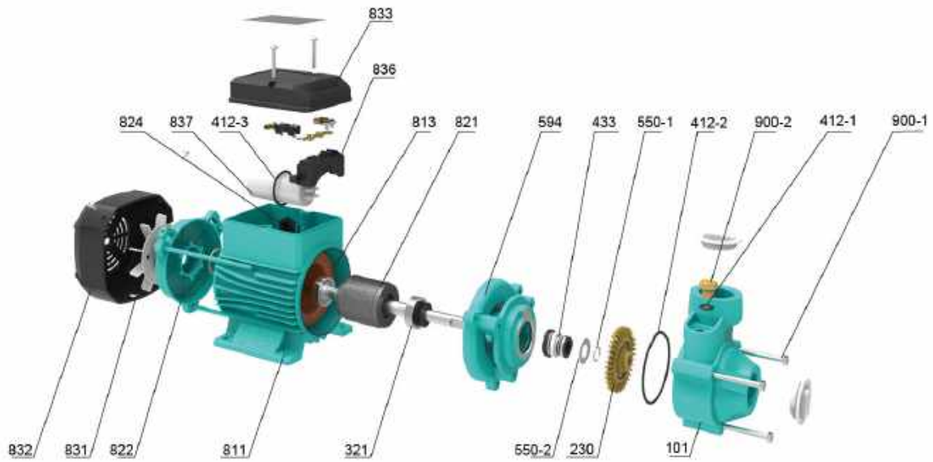

No.	Part name	No.	Part name	No.	Part name
900-1	Hexagon head bolts full thread	550-2	Flat Washers	831	fan
412-1	O-ring	594	Coupling	832	Fan cover
900-2	Vent cock	821	Rotor	837	Running capacitor
101	Pump body	813	Stator core with windings	412-3	O-ring
412-2	O-ring	321	Deep groove ball bearing	836	Terminal block
550-1	Circlip for shaft	811	chassis	833	Junction Box
230	impeller	822	Back cover	824	Cable
433	Machinery Seal				

Model	QB60G1	QB60L1	QB60K1	QB70G1	QB80G1
Capacitor(μF)	10μF\450V	10 μF/450V	10 μF/450V	12μF\450V	15μF\450V
Bearing	6201-2RZ			6202-2RZ	
Motor Shaft	45#Steel+304				
Machinery Seal	108-12/21B:A(P)	103-12/20.5 B:A(P)		108-12/21B:A(P)	
	A:Graphite B:Ceramic P:NBR				
Motor Case	Aluminum				
Coupling	Cast iron				
Pump Body	Cast iron				
Impeller	Brass				

Dimensions & Weight

Model	DN1	DN2	Dim.(mm)												N.W. (kg)
	Inch		A	B	C	D	E	F	G	L	S	H1	H2	H3	
QB60G1	1	1	100	123	121	16	42	64	80	255	7	63	75	158	4.8
QB60L1	1	1	93	115	115	15	33.5	64	58	223	7	60	68	148	4.0
QB60K1	1	1	93	115	115	15	33.5	64.5	58	223.5	7	60	68	148	4.4
QB70G1	1	1	112	136	139	18	49.5	58.5	88	279	7	72	85	181	8
QB80G1	1	1	112	136	139	20	48	60	88	282	7	72	85	181	9.5

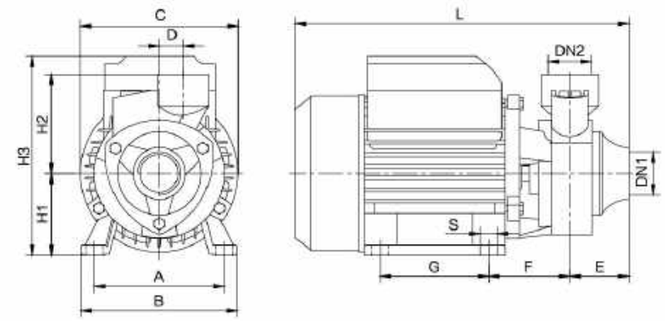

Packing Size & Weight

Model	Dim.(L×W×H) mm	G.W. (kg)	Dim. For Outer Packing(L×W×H)mm	G.W. (kg)	Packing Qty. (pcs)	20'Loading Qty. (pcs)
QB60G1	280×140×170	4.8	440x290x360	29.3	6	3060
QB60L1	235x135x175	4.3	425×245×375	26.6	6	4320
QB60K1	235x135x175	4.7	425×245×375	29	6	4320
QB70G1	315×190×202	8.3	315x190x202	17.5	1	2100
QB80G1	315×190×202	9.9	315x190x202	20.5	1	2000

WZB

Performance Range

Max. Flow: 6m³/h
Max. Head: 55m

Application Limits

- The medium temperature of WZB series does not exceed +60℃
- The ambient temperature does not exceed +40℃ ;
- The pH of the medium is between 6.5 and 8.5, the volume ratio of the medium containing solid impurities is ≤ 0.1%, and the particle size is ≤ 0.2mm;
- The maximum working pressure is 6 bar;
- The highest altitude is 1000m;

Certificate

CE

Basic Configuration

- Pump body: cast iron, stainless steel inserts
- Impeller: brass
- Axis: 45#+304
- Motor: 2-stage asynchronous motor, copper coil, fully closed fan cooling, continuous operation
- Protection class: IPX4
- Insulation class: F

Application Fields

This series of electric pumps are small in size, light in weight, compact in structure, and simple and convenient to install. They are widely used in household pressurization, farmland irrigation, sprinkler irrigation, garden irrigation, vegetable greenhouse water supply and aquaculture water supply and drainage, and well pumping water.

Optional Available On Request

- NSK bearing

Model Instruction

WZB 350 T1

- "T1" indicates iron case
- Power
- Vortex self-priming electric pump (radial suction)

Performance Curve

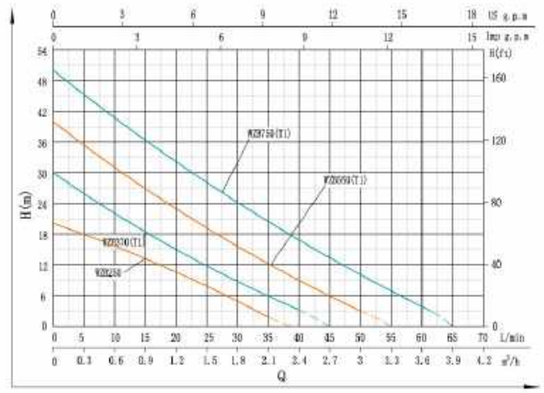

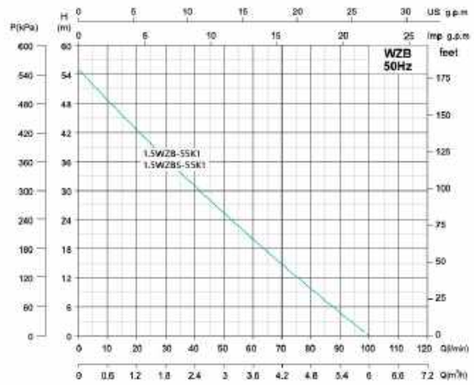

Model		Power		Max. Flow	Max. Head	Head Range	Max. Suction
Single-Phase	Three-Phase	kW	HP	(m³/h)	(m)	(m)	(m)
WZB250	-	0.25	0.34	2.3	20	16~0	8
WZB370	-	0.37	0.5	2.7	30	27~0	8
WZB550	-	0.55	0.75	3.3	40	37~0	8
WZB750	-	0.75	1	3.9	50	47~0	8
WZB370T1	WZBS370T1	0.37	0.5	2.7	30	27~0	8
WZB550T1	WZBS550T1	0.55	0.75	3.3	40	37~0	8
WZB750T1	WZBS750T1	0.75	1	3.9	50	47~0	8
1.5WZB-55K1	1.5WZBS-55K1	1.1	1.5	6	55	51~1	8

Components & Materials

Model	WZB250	WZB370	WZB550	WZB750	WZB370T1	WZB550T1	WZB750T1	1.5WZB-55K1	1.5WZBS-55K1
Capacitor	10μF\450V	10μF\450V	12μF\450V	15μF\450V	10μF\450V	12μF\450V	15μF\450V	25 μF/450V	/
End cap Bearing	6201-2RZ	6201-2RZ	6202-2RZ	6202-2RZ	6201-2RZ	6202-2RZ	6202-2RZ	6203-2RZ	6203-2RZ
Coupling Bearing	6201-2RZ	6201-2RZ	6202-2RZ	6202-2RZ	6201-2RZ	6202-2RZ	6202-2RZ	6204-2RZ	6204-2RZ
Motor Shaft	Steel 45#+304							Steel 45#	Steel 45#
Mechanical Seal	108-12/21& B:A(PC)	108-12/21& B:A(PC)	108-12/21& B:A(PC)	108-12/21& B:A(PC)	108-12/21& B:A(PC)	108-12/21& B:A(PC)	108-12/21& B:A(PC)	108-14/25 S:A (P)Stationary seal ring ø28	
	A: Hot graphite, B: Alumina ceramic, P: Nitrile rubber, C: Stainless steel (06Cr19Ni10)								
Motor Case	Aluminum				Cast iron				
Coupling	Cast iron								
Pump Body	Cast iron								
Impeller	Hpb57-3	Hpb57-3	Hpb57-3	Hpb57-3	Hpb57-3	Hpb57-3	Hpb57-3	Hpb57-3	Hpb57-3

Components & Materials

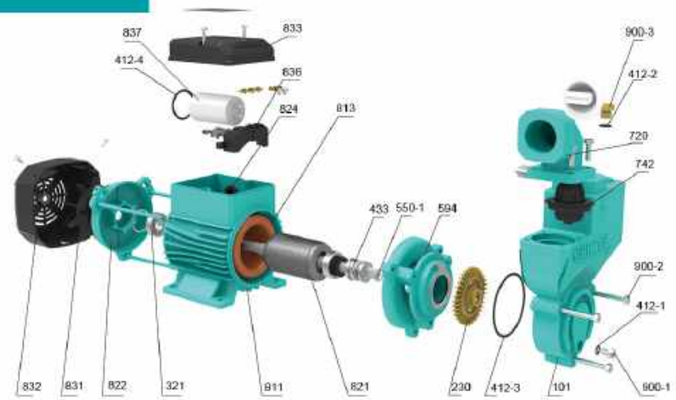

No.	Part name	No.	Part name	No.	Part name
900-3	Vent cock	230	impeller	831	fan
412-2	O-ring	594	Coupling	832	Fan cover
720	Inlet pipe	550-1	Circlip for shaft	824	Cable
742	Check valve	433	Machinery Seal	836	Terminal block
900-2	Hexagon head bolts full thread	821	Rotor	833	Junction Box
412-1	O-ring	813	Stator core with windings	837	Running capacitor
900-1	Slotted cheese head screws	811	chassis	412-4	O-ring
101	Pump body	321	Deep groove ball bearing		
412-3	O-ring	822	Back cover		

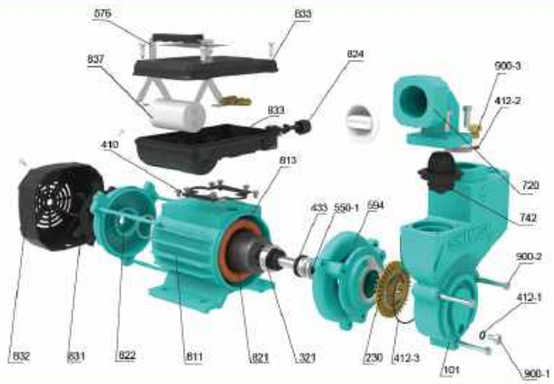

No.	Part name	No.	Part name	No.	Part name
900-3	Vent cock	230	impeller	831	fan
412-2	O-ring	594	Coupling	832	Fan cover
720	Inlet pipe	550-1	Circlip for shaft	824	Cable
742	Check valve	433	Machinery Seal	833	Junction box cover
900-2	Hexagon head bolts full thread	321	Deep groove ball bearing	576	Handle
412-1	O-ring	813	Stator core with windings	837	Running capacitor
900-1	Slotted cheese head screws	821	Rotor	410	Rubber gasket
101	Pump body	811	chassis	833	Junction Box
412-3	O-ring	822	Back cover		

Dimensions & Weight

Model		DN1	DN2	Dim.(mm)										
Single-Phase	Three-Phase	Inch		A	B	C	D	E	F	G	L	H1	H2	H3
WZB250	-	1"	1"	100	123	165	22.5	19	56	80	235	63	124	212
WZB370	-	1"	1"	100	123	165	22.5	19	56	80	235	63	124	212
WZB550	-	1"	1"	112	136	165	22.5	22	55	88	254	72	135	232
WZB750	-	1"	1"	112	136	165	22.5	22	57	88	255	72	135	232
WZB370T1	WZBS370T1	1"	1"	95	121	178	22.5	19	62	70	235	63	124	212
WZB550T1	WZBS550T1	1"	1"	110	137	178	22.5	22	62	75	253	75	135	235
WZB750T1	WZBS750T1	1"	1"	110	137	178	22.5	22	63	75	255	75	135	235
1.5WZB-55K1	1.5WZBS-55K1	1.5"	1.5"	114	136	198.5	31	16.5	87.5	101	286	80	168	278

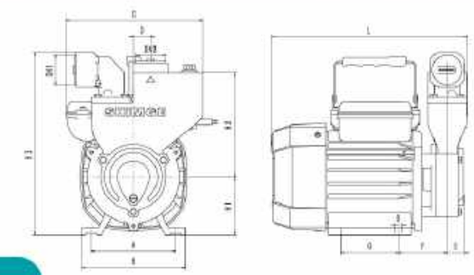

Packing Size & Weight

Model		Dim.(L×W×H) mm	G.W. (kg)	Dim. For Outer Packing(L×W×H)mm	G.W. (kg)	20'Loading Qty. (pcs)
Single-Phase	Three-Phase					
WZB250	-	280×215×272	6.5	280×215×272	6.5	1728
WZB370	-	280×215×272	7.3	280×215×272	7.3	1728
WZB550	-	305×230×290	9.7	305×230×290	9.7	1330
WZB750	-	305×230×290	10.7	305×230×290	10.5	1330
WZB370T1	WZBS370T1	280×215×272	9.1	280×215×272	9.1/8.5	1728
WZB550T1	WZBS550T1	305×230×290	11.7	305×230×290	11.7	1330
WZB750T1	WZBS750T1	305×230×290	13.7	305×230×290	13.7/12.7	1330
1.5WZB-55K1	1.5WZBS-55K1	310×215×298	18.5/19	310×215×298	18.5/19	1470

PW

Application Limits

- Suction lift up to 8 m
- Max. working pressure 6 bar
- Liquid temperature up to +90℃
- Ambient temperature up to +40℃
- Voltage fluctuations should not exceed 10% of rate value

Certificate

CE

Application Fields

- Suitable for use with clean water that does not contain abrasive particles or other similar water of liquid.
- widely used domestic water , automatic boosting , water tower supply, well water lifting, solar hot water boosting.

Motor

- Single phase motor, copper wires, built-in thermal protector, fully enclosed motor shell
- Continuous service S1
- Protection class: IPX4
- Insulation class: F

Basic Configuration

- Compact design, easy installation
- Pressure and flow switch control automatically
- Pump body insert of stainless sheet 304
- Shaft extension is stainless steel 304
- The impeller of copper alloy
- High quality mechanical seal

Optional Available On Request

- NSK bearing

Model Instruction

PW 370

- 370 — Model code
- PW — Automatical Self-priming vortex Pump

Performance Curve

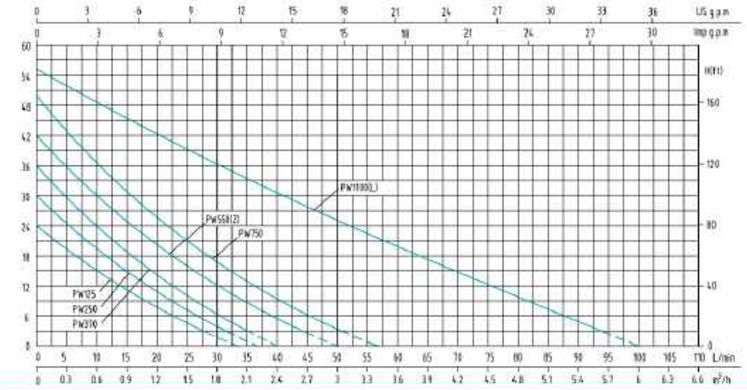

Model	Power		Max. Flow (m^3/h)	Max. Head (m)	Head Range (m)	Max. Suction (m)
	kW	HP				
PW125	0.125	0.17	2	24	20~0	8
PW250	0.25	0.34	2.2	30	26~0	8
PW370	0.37	0.5	2.4	36	32~0	8
PW550	0.55	0.75	3	42	38~0	8
PW750	0.75	1	3.4	50	46~0	8
PW1100	1.1	1.5	6	55	50~0	8
PW1100L	1.1	1.5	6	55	50~0	8

Note:The cable length of single phase pump is 1.3m,Europe plug.

Components & Materials

No.	Part name
752	Check valve seat
143	Filter assembly
594	Connector body
230	Impeller
592	Base
903	Vent cock
950	Spring
932	Circlip for shaft
814	Stator core with winding
693	Pressure switch assembly
831	Fan\QB60

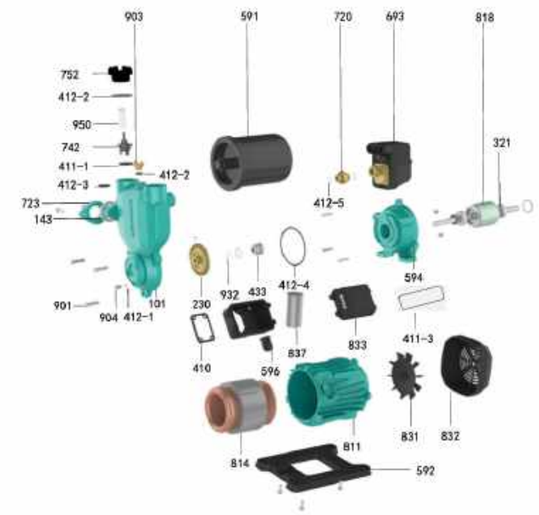

No.	Part name	No.	Part name	No.	Part name
723	Inlet pipe	433	Mechanical seal	411-1	Rubber washer
591	Pressure tank	720	Adapter	412-5	O-ring
811	Casing	410	Rubber gasket	412-3	O-ring
596	Cable lock	832	Fan cover	412-1	O-ring
101	Pump body	837	Running capacitor	412-4	O-ring
904	Slotted cheese head screw	411-2	Rubber washer	901	Hexagon head bolt
321	Deep groove ball bearing	411-3	Rubber washer	742	check valve
833	Junction box assembly	412-2	O-ring		

Model	PW125	PW250	PW370	PW550	PW750	PW1100(L)
Capacitor(μF)	8μF\450V	10μF/450V	10μF/450V	12μF/450V	18μF/450V	30μF\450V
End cap Bearing	6201-2RZ	6201-2RZ	6201-2RZ	6202-2RZ	6202-2RZ	6203-2RZ
Connection Part Bearing	6201-2RZ	6201-2RZ	6201-2RZ	6202-2RZ	6202-2RZ	6203-2RZ
Motor Shaft	Steel 45#+304					
Mechanical Seal	108-12 S:A (PC)					108-14/25 S:A (PC)
	A: Graphite,B:Alumina ceramic,P:NBR,C:stainless steel(06Cr19Ni10)					
Motor Case	Aluminum					
Coupling	Cast Iron					
Pump Body	Cast Iron					
Impeller	Brass					

Dimensions & Weight

Model	DN1	DN2	Dim.(mm)											N.W. (kg)
	Inch		A	B	C	D	E	F	G	L	H1	H2	H3	
PW125	3/4	3/4	110	136	204	46	39	49.5	165	259	72	150	245.5	7.8
PW250	1	1	110	136	204	40	39	49.5	165	259	72	150	245.5	8.5
PW370	1	1	110	136	204	40	39	49.5	165	259	72	150	245.5	8.8
PW550	1	1	132	160	212	50	39	41.5	190	268	84	170	285	11.4
PW750	1	1	132	160	212	50	39	41.5	190	268	84	170	285	13.1
PW1100	1.5	1.5	145	210	254	49	50	54	205	330	96	196	127	20.5
PW1100L	1.5	1.5	235	270	264	49	81	91	196	427	347	196	605	24.6

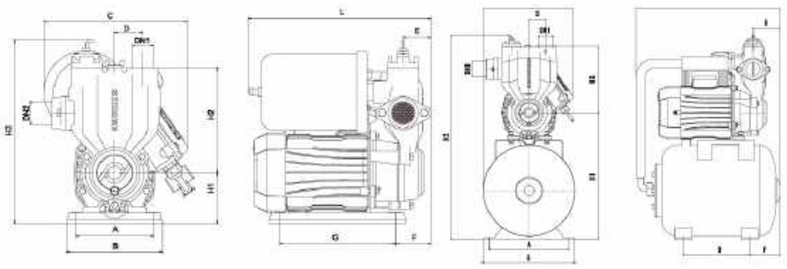

Packing Size & Weight

Model	Dim.(L×W×H) mm	G.W. (kg)	20'Loading Qty. (pcs)
PW125	295×230×300	8.3	1600
PW250	295×230×300	9.0	1600
PW370	295×230×300	9.3	1600
PW550	315×245×325	12.1	1320
PW750	315×245×325	13.8	1320
PW1100	365×280×380	21.9	720
PW1100L	515×320×640	26.5	260

PW-Z

Application Limits

- Suction lift up to 8 m
- Max. working pressure 6 bar
- Liquid temperature up to +90℃
- Ambient temperature up to +40℃
- Voltage fluctuations should not exceed 10% of rate value

Certificate

CE

Application Fields

- Suitable for use with clean water that does not contain abrasive particles or other similar water of liquid.
- widely used domestic water , automatic boosting , water tower supply, well water lifting, solar hot water boosting.

Motor

- Single phase motor, copper wires, built-in thermal protector, fully enclosed motor shell
- Continuous service S1
- Protection class: IPX4
- Insulation class: F

Basic Configuration

- Compact design, easy installation
- Pressure and flow switch control automatically
- Pump body insert of stainless sheet 304
- Shaft extension is stainless steel 304
- The impeller of copper alloy
- High quality mechanical seal

Optional Available On Request

- NSK bearing

Model Instruction

PW 370 Z

- Z — Intelligent (no "Z" for general)
- 370 — Model code
- PW — Automatical Self-priming vortex Pump

Performance Curve

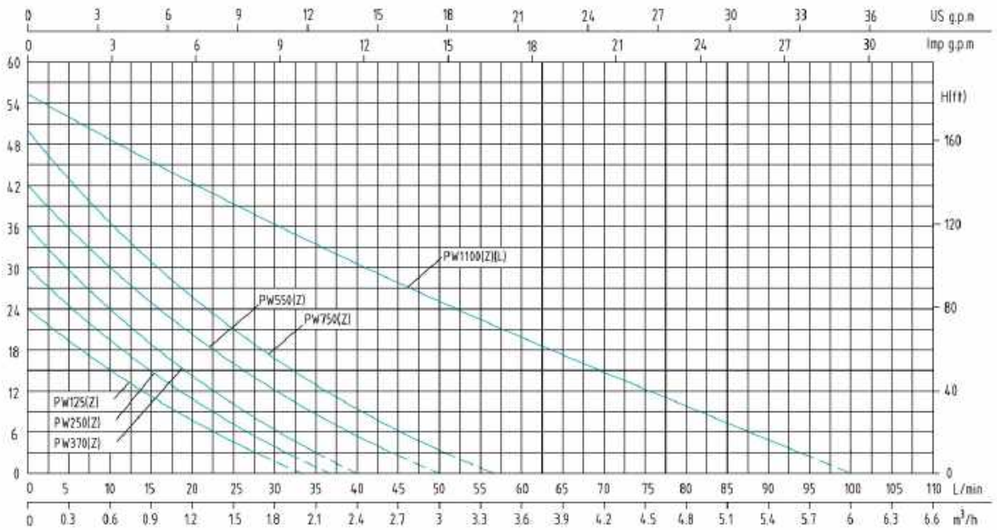

Model	Power		Max. Flow (m³/h)	Max. Head (m)	Head Range (m)	Max. Suction (m)
	kW	HP				
PW125Z	0.125	0.17	2	24	20~0	8
PW250Z	0.25	0.34	2.2	30	26~0	8
PW370Z	0.37	0.5	2.4	36	32~0	8
PW550Z	0.55	0.75	3.0	42	38~0	8
PW750Z	0.75	1	3.4	50	46~0	8
PW1100Z	1.1	1.5	6	55	50~0	8
PW1100ZL	1.1	1.5	6	55	50~0	8

Note:The cable length of single phase pump is 1.3m,Europe plug.

Components & Materials

No.	Specifications
412-2	O-ring
412-3	O-ring
412-1	O-ring
412-4	O-ring
101	Pump body
592	Base
596	Cable lock
824	Cable (domestic)
903	Vent cock
831	Fan\QB60
832	Fan cover
143	Filter assembly
811	Casing
433	Mechanical seal
723	Inlet pipe
904	Slotted cheese head screw
833	Control box assembly
594	Connector body
697	Flow switch
321	Deep groove ball bearing
410	Rubber gasket
411	Rubber washer
591	Pressure tank
693	Pressure switch
230	Impeller
814	Stator core with winding
837	Running capacitor
932	Circlip for shaft
818	Rotor
901	Hexagon head bolt

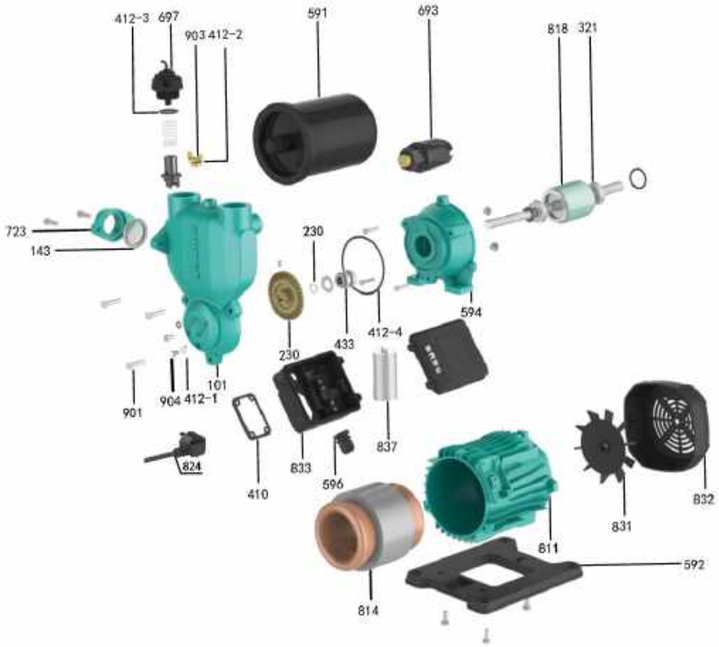

Model	PW125Z	PW250Z	PW370Z	PW550Z	PW750Z	PW1100Z(L)
Capacitor(μF)	8μF\450V	10μF/450V	10μF/450V	12μF/450V	18μF/450V	30μF\450V
End cap Bearing	6201-2RZ	6201-2RZ	6201-2RZ	6202-2RZ	6202-2RZ	6203-2RZ
Connection Part Bearing	6201-2RZ	6201-2RZ	6201-2RZ	6202-2RZ	6202-2RZ	6203-2RZ
Motor Shaft	Steel 45#+304					
Mechanical Seal	108-12 S:A (PC)					108-14/25 S:A (PC)
	A: Graphite, B:Alumina ceramic,P:NBR,C:stainless steel (06Cr19Ni10) S: Reactive Sintered Silicon Carbide,T: Polytetrafluoroethylene					
Motor Case	Aluminum					
Coupling	Castiron					
Pump Body	Castiron					
Impeller	Brass					

Dimensions & Weight

Model	DN1	DN2	Dim.(mm)											N.W. (kg)
	Inch		A	B	C	D	E	F	G	L	H1	H2	H3	
PW125Z	3/4	3/4	110	136	204	46	39	49.5	165	259	72	150	245.5	7.8
PW250Z	1	1	110	136	204	40	39	49.5	165	259	72	150	245.5	8.5
PW370Z	1	1	110	136	204	40	39	49.5	165	259	72	150	245.5	8.8
PW550Z	1	1	132	160	212	50	39	41.5	190	268	84	170	285	11.4
PW750Z	1	1	132	160	212	50	39	41.5	190	268	84	170	285	13.1
PW1100Z	1.5	1.5	145	210	254	49	50	54	205	330	96	196	127	20.5
PW1100ZL	1.5	1.5	235	270	264	49	81	91	196	427	347	196	605	24.6

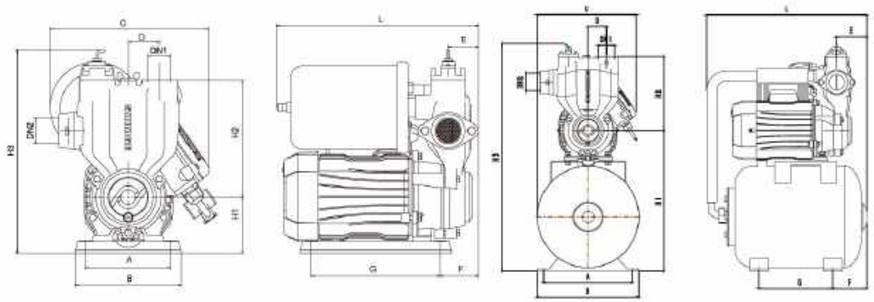

Model	Dim.(L×W×H) mm	G.W. (kg)	20'Loading Qty. (pcs)
PW125Z	295×230×300	8.3	1600
PW250Z	295×230×300	9.0	1600
PW370Z	295×230×300	9.3	1600
PW550Z	315×245×325	12.1	1320
PW750Z	315×245×325	13.8	1320
PW1100Z	365×280×380	21.9	720
PW1100ZL	515×320×640	26.5	260

PW-F

Application Limits

- Suction lift up to 8 m
- Max. working pressure 6 bar
- Liquid temperature up to +90℃
- Ambient temperature up to +40℃
- Voltage fluctuations should not exceed 10% of rate value

Certificate

CE

Application Fields

- Suitable for use with clean water that does not contain abrasive particles or other similar water of liquid.
- widely used domestic water , automatic boosting , water tower supply, well water lifting, solar hot water boosting.

Motor

- Single phase motor, copper wires, built-in thermal protector, fully enclosed motor shell
- Continuous service S1
- Protection class: IPX4
- Insulation class: F

Basic Configuration

- Compact design, easy installation
- Pressure and flow switch control automatically
- Pump body insert of stainless sheet 304
- Shaft extension is stainless steel 304
- The impeller of copper alloy
- High quality mechanical seal

Optional Available On Request

- NSK bearing

Model Instruction

PW 370 F

- F — Free debugging
- 370 — Model code
- PW — Automatical Self-priming vortex Pump

Performance Curve

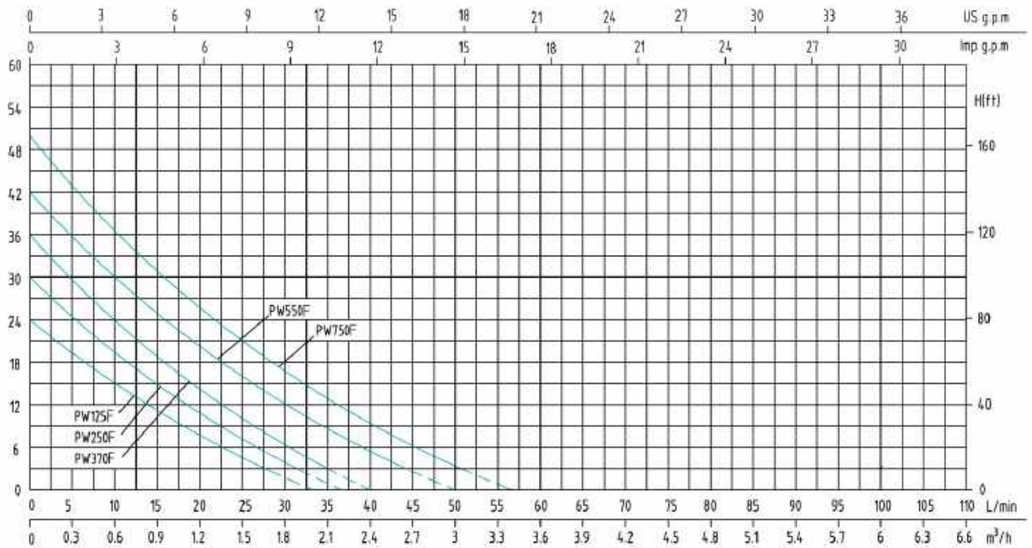

Model	Power		Max. Flow (m³/h)	Max. Head (m)	Head Range (m)	Max. Suction (m)
	kW	HP				
PW125F	0.125	0.17	2	24	20~0	8
PW250F	0.25	0.34	2.2	30	26~0	8
PW370F	0.37	0.5	2.4	36	32~0	8
PW550F	0.55	0.75	3.0	42	38~0	8
PW750F	0.75	1	3.4	50	46~0	8

Note:The cable length of single phase pump is 1.3m,Europe plug.

Components & Materials

No.	Specifications
412-2	O-ring
412-1	O-ring
412-3	O-ring
412-4	O-ring
832	Fan cover
143	Filter assembly
831	Fan\QB60
818	Rotor
811	Casing
693	Pressure sensor
596	Cable lock
594	Connector body
591	Pressure tank
932	Circlip for shaft
433	Mechanical seal
903-2	Vent cock
837	Running capacitor
833	Control box assembly
824	Cable (domestic)
723	Inlet pipe
101	Pump body
903-1	Slotted cheese head screw
814	Stator core with winding
697	Flow switch
592	Base
411	Rubber washer
410	Rubber gasket
321	Deep groove ball bearing
230	Impeller
901	Hexagon head bolt

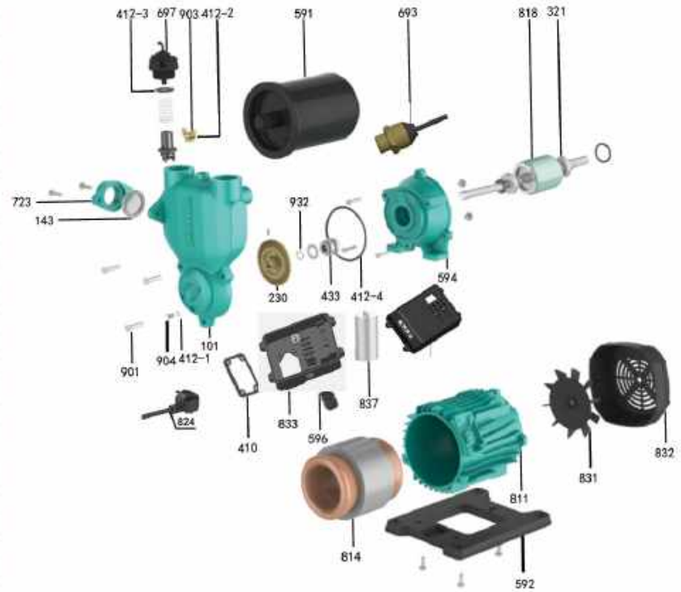

Model	PW125F	PW250F	PW370F	PW550F	PW750F
Capacitor(μF)	8μF/450V	10μF/450V	10μF/450V	12μF/450V	18μF/450V
End cap Bearing	6201-2RZ	6201-2RZ	6201-2RZ	6202-2RZ	6202-2RZ
Connection Part Bearing	6201-2RZ	6201-2RZ	6201-2RZ	6202-2RZ	6202-2RZ
Motor Shaft	Steel 45#+304				
Mechanical Seal	108-12 S:A (PC)				
	A: Graphite,B:Alumina ceramic,P:NBR,C:stainless steel(06Cr19Ni10)				
Motor Case	Aluminum				
Coupling	Cast Iron				
Pump Body	Cast Iron				
Impeller	Brass				

Dimensions & Weight

Model	DN1	DN2	Dim.(mm)												N.W. (kg)
	Inch		A	B	C	D	E	F	G	H	I	J	K	L	
PW125F	3/4	3/4	202	39	165	259	261	222	157	110	210	89	80	9	7.8
PW250F	1	1	202	39	165	259	261	222	157	110	210	89	80	9	8.5
PW370F	1	1	202	39	165	259	261	222	157	110	210	89	80	9	8.8
PW550F	1	1	224	39	190	265	293	254	189	132	218	101	100	9	11.4
PW750F	1	1	224	39	190	266	293	254	189	132	218	101	100	9	13.1

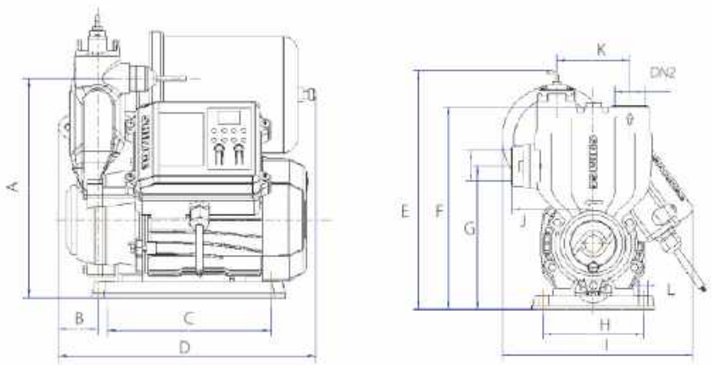

Model	Dim.(L×W×H) mm	G.W. (kg)	20'Loading Qty. (pcs)
PW125F	295×230×300	8.3	1600
PW250F	295×230×300	9.0	1600
PW370F	295×230×300	9.3	1600
PW550F	315×245×325	12.1	1320
PW750F	315×245×325	13.8	1320

PZ

Performance Range

Max. Flow: 3.6m³/h
Max. Head: 44m

Application Limits

- The ambient temperature is -15℃ ~+40℃
- The temperature range of PZ medium is 0℃ ~+60℃ ;
- The pH of the medium is between 6.5 and 8.5
- The volume ratio of solid impurities is not more than 0.1%, and the particle size is not more than 0.2mm

Certificate

CE

Basic Configuration

The PZ series of automatic vortex self-priming electric pumps (hereafter referred to as electric pumps) comply with Q/SG 202 standards. The electric pump is mainly composed of four parts: electric motor, water pump, sealing and control system. The motor is an asynchronous motor, and the impeller structure of the electric pump is vortex type. It has the characteristics of small flow, high head and self-priming. The electric pump is equipped with a control system. According to the change of water pressure or flow, the automatic operation of the electric pump is practiced, that is, the valve is opened. Automatic operation, close the valve, the electric pump will stop automatically, no need to turn off the power manually. This series of products has the function of stable water supply. The electric pump is small in size, light in weight, compact in structure and simple and convenient to install. It is an ideal household electric pump with high efficiency, energy saving, sanitation and safety. It is suitable for garden irrigation, pipeline pressurization, and wells. Use water pumping, water tower for pressurization, tap water pressurization, vegetable greenhouse watering, and water supply and drainage for aquaculture and other occasions.

Application Fields

It is suitable for garden irrigation, pipeline pressurization, well water lifting, water tower water pressurization, tap water pressurization, vegetable greenhouse watering, and water supply and drainage for aquaculture

Optional Available On Request

- NSK bearing

Model Instruction

PZ 370

- 370 — Specification Code
- PZ — Automatic vortex self-priming electric pump

Performance Curve

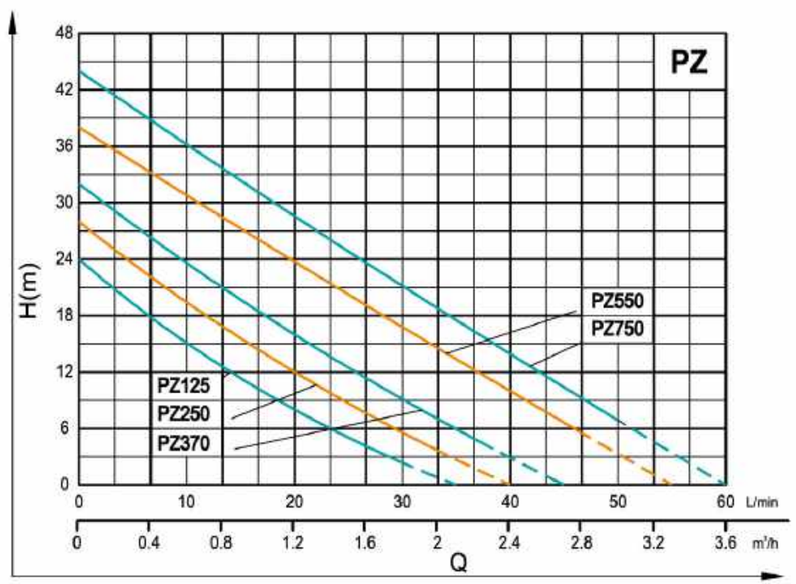

Model	Power		Max. Flow (m^3/h)	Max. Head (m)	Head Range (m)	Max. Suction (m)
	kW	HP				
PZ125	0.125	0.17	2.1	24	20~0	6
PZ250	0.25	0.34	2.4	28	24~0	6
PZ370	0.37	0.5	2.7	32	28~0	6
PZ550	0.55	0.75	3.3	38	34~0	6
PZ750	0.75	1	3.6	44	40~0	6

NOTE: 0.3m short-term without plug

Components & Materials

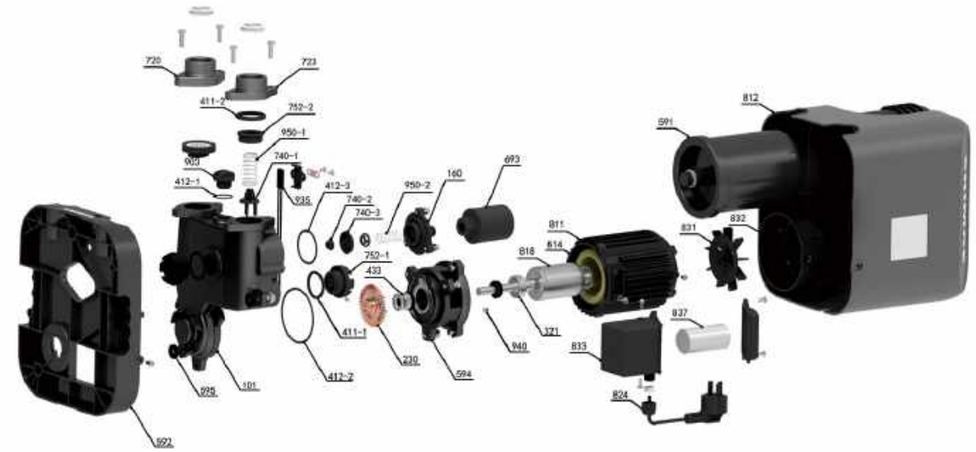

No.	Part name	No.	Part name	No.	Part name
742-1	Valve sleeve	903	Vent cock	101	Pump body
740-2	Diaphragm seat	742-2	Check valve with filter	950-2	Small spring
230	Impeller	740-3	Diaphragm	740-1	Flow stabilizing valve
752-1	Check valve seat	412-3	O-ring	433	Mechanical seal
412-2	O-ring	837	Running capacitor	594	Connector body
824	Cable (domestic)	833	Junction box	935	External thermal protector
723	Inlet pipe	818	Rotor	832	Fan cover
940	Ordinary flat key	812	Outer housing	693	Pressure switch
412-1	O-ring	720	Outlet pipe	591	Pressure tank
752-2	Flow stabilizer Locating sleeve	410	Rubber washer	321	Deep groove ball bearing
950-1	Large spring	160	Flow stabilizer cover	831	Fan\QB60
411	Rubber washer	811	Casing	814	Stator core with winding
592	Base	595	Rubber ring		

Model	PZ125	PZ250	PZ370	PZ550	PZ750
Capacitor	10μF\450V	10μF\450V	12μF\450V	12μF\450V	18μF\450V
End cap Bearing	6201-2RZ	6201-2RZ	6201-2RZ	6202-2RZ	6202-2RZ
Connection Part Bearing	6201-2RZ	6201-2RZ	6201-2RZ	6202-2RZ	6202-2RZ
Motor Shaft	45#+304#	45#+304#	45#+304#	45#+304#	45#+304#
Mechanical Seal	108-12/21&B:A(RC)	108-12/21&B:A(RC)	108-12/21&B:A(RC)	108-12/21&B:A(RC)	108-12/21&B:A(RC)
Motor Case	Aluminum	Aluminum	Aluminum	Aluminum	Aluminum
Coupling	cast iron	cast iron	cast iron	cast iron	cast iron
Pump Body	cast iron	cast iron	cast iron	cast iron	cast iron
Impeller	copper	copper	copper	copper	copper

Dimensions & Weight

Model	DN1	DN2	Dim.(mm)										N.W. (kg)
	Inch		A	B	C	E	F	L	H1	H2	H3	S	
PZ125	1	1	85	279	120	95	50	241	40	50	269	125	10.2
PZ250	1	1	85	279	120	95	50	241	40	50	269	125	10.9
PZ370	1	1	85	279	120	95	50	241	40	50	269	125	11.2
PZ550	1	1	85	305	144	105	60	270	45	56.5	295	155	14
PZ750	1	1	85	305	144	105	60	270	45	56.5	295	155	14.9

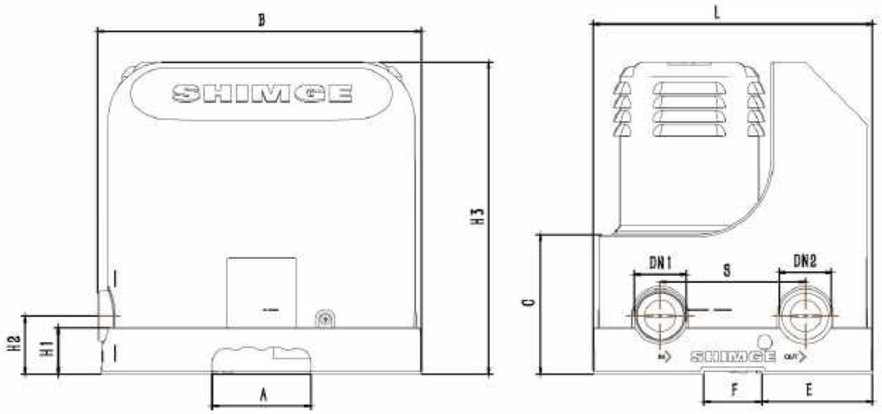

Packing Size & Weight

Model	Dim.(L×W×H) mm	N.W. (kg)	G.W. (kg)	20'Loading Qty. (pcs)
PZ125	330×300×320	10.2	10.9	931
PZ250	330×300×320	10.9	11.7	931
PZ370	330×300×320	11.2	12.2	931
PZ550	370×340×355	14.0	15.0	918
PZ750	370×340×355	14.9	15.9	918

CPm

Performance Range

Max. Flow: 8.4m³/h
Max. Head: 55m

Certificate

CE

Application Limits

- Suction head up to 7m
- Liquid temperature up to +40℃
- Ambient temperature up to +40℃
- Max. Working pressure: 6bar
- Voltage fluctuation should not exceed 10% of rated value.
- pH: 6.5 to 8.5

Basic Configuration

- Pump body: cast iron
- Impellers: brass/304
- Shaft: 304+45#
- Mechanical sealing: ceramic / graphite / NBR rubber
- Motor: two asynchronous motors, copper coils, built-in thermal protection, all closed fan-cooled, continuous operation
- Protection class: IPX4
- Insulation class: F

Application Fields

- Suitable for transferring water without abrasive particles or other liquid whose properties are similar to water.
- Widely used in garden irrigation, vegetable greenhouse water supply, breeding industry water supply and drainage, various corollary equipment, etc.

Optional Available On Request

- NSK bearing

Model Instruction

CPm 200

- 200 — Power
- CPm — Centrifugal miniature electric pump

Performance Curve

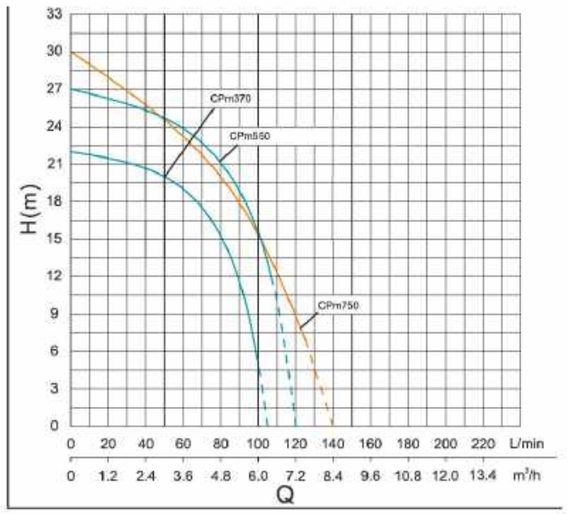

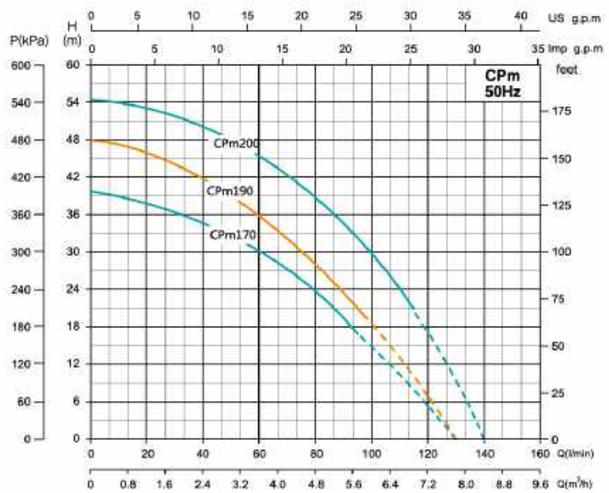

Model		Power		Max. Flow (m^3/h)	Max. Head (m)	Head Range (m)	Max. Suction (m)
Single-Phase	Three- Phase	kW	HP				
CPm370	CP370	0.37	0.5	6	22	22~8	7
CPm550	CP550	0.55	0.75	6.6	26	26~11	7
CPm750	CP750	0.75	1	7.2	32	32~14	7
CPm170	CP170	1.1	1.5	7.8	40	40~17	7
CPm190	CP190	1.5	2	7.8	48	48~20	7
CPm200	CP200	2.2	3	8.4	55	55~20	7

Components & Materials

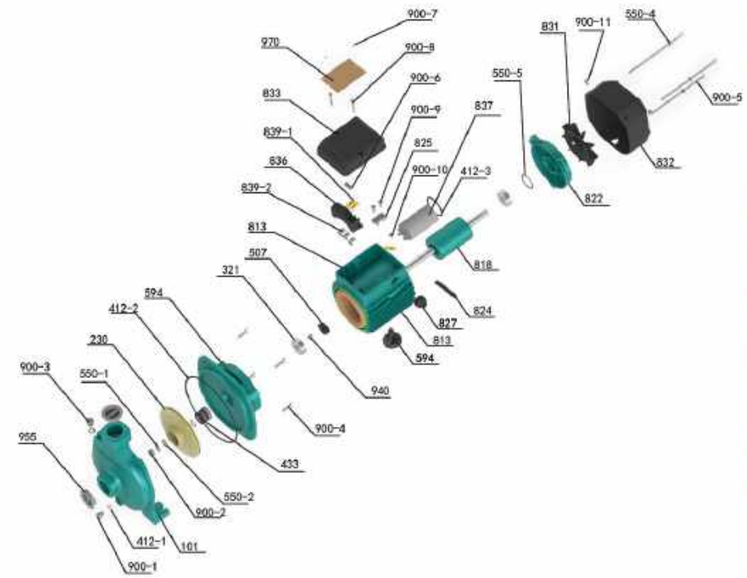

No.	Specifications
955	Dust cover
900-3	Vent cock
550-1	Spring washer
220	Impeller
412-2	O-ring
594	Connector
321	Deep groove ball bearing
507	Water retaining ring
813	Stator
900-1	Slotted cheese head screw
839-2	Insert spring 6.3
836	Terminal block
839-1	Closed wiring terminal
833	Junction box
970	Nameplate
900-7	Rivet
900-8	Hexagon cross recessed pan head screw
900-6	Cross recessed flange screw
900-9	Hexagon cross recessed pan head screw
825	Cable pressing plate
900-10	Hexagon cross recessed pan head screw
837	Running capacitor

No.	Specifications	No.	Specifications	No.	Specifications
412-3	O-ring	822	Rear end cover	900-4	Hexagon head bolt
550-5	Wave spring	818	Rotor	433	Mechanical seal
831	Fan	824	Cable	550-2	Flat washer
900-11	Cross recessed flange screw	827	Cable sheath	900-2	Type I hexagon nut
550-4	Spring washer	813	Stator	101	Pump body
900-5	Hexagon bolt	594	Foot	412-1	O-ring
832	Fan cover	940	Flat key		

Model	Single-Phase	CPm370	CPm550	CPm750	CPm170	CPm190	CPm200
	Three- Phase	CP370	CP550	CP750	CP170	CP190	CP200
Capacitor(μF)		18μF\450V	15μF\450V	20μF\450V	40μF/450V	45 μF/450V	45 μF/450Vx2
End cap Bearing		6201-2RZ	6202-2RZ	6202-2RZ	6204-2RZ	6204-2RZ	6205-2RZ
Connection Part Bearing		6201-2RZ	6202-2RZ	6202-2RZ	6204-2RZ	6204-2RZ	6304-2RZ
Motor Shaft		Steel 45#+304					
Mechanical Seal		108-12/21& B:A(PC)	108-14/25& B:A(PC)	108-14/25& B:A(PC)	108-17/23.5 B:A (P) Stationary seal ring ø30		
		A:Graphite B:Ceramic P:NBR					
Motor Case		YL102			Aluminum		
Coupling		HT200			Cast Iron		
Pump Body		HT200			Cast Iron		
Impeller		304			Brass		

Dimensions & Weight

Model	DN1	DN2	Dim.(mm)									N.W. (kg)
	inch		A	B	E	F	G	L	S	H1	H2	
CPm370	1	1	124	160	43	31	114	268	10	87	125	8.5
CPm550	1	1	140	180	47	38	112	294	10	98	132	11.5
CPm750	1	1	140	182	47	38	112	294	10	100	144	13.5
CPm170	1.25	1	170	210	46	45.5	164.5	346	11	108	153	20
CPm190	1	1	185	230	36	37	171	351	10	116	177	23
CPm200	1	1	185	230	54	37	197	401	10	116	177	30.5

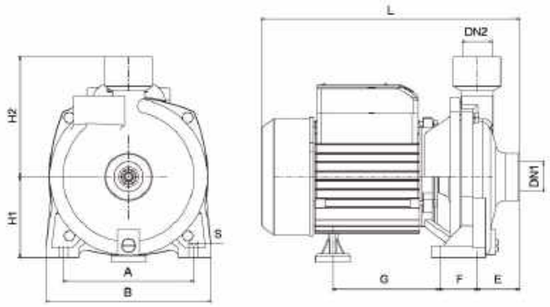

Packing Size & Weight

Model	Dim.(L×W×H) mm	G.W. (kg)	20'Loading Qty. (pcs)
CPm370	300×205×270	9	1672
CPm550	330×225×285	12	1456
CPm750	330×230×300	14	1225
CPm170	390×240×290	21	1168
CPm190	390×260×320	24.5	981
CPm200	455×280×340	33.5	742

SHF20A/SHF30A

SHFm5AM

SHF(m)

Performance Range

Max. Flow: 140m³/h
Max. Head: 24.5m

Certificate

CE

Application Limits

- Suction head up to 7m
- Liquid temperature up to +40℃
- Ambient temperature up to +40℃
- Max. Working pressure: 3.6bar
- Voltage fluctuation should not exceed 10% of rated value.
- pH: 6.5 to 8.5

Basic Configuration

- Pump body: cast iron
- Impellers: brass/cast iron
- SHFm Shaft: 45 # Steel SHF Shaft: 45 # Steel+304
- Mechanical sealing: ceramic / graphite / NBR rubber
- Motor: two asynchronous motors, copper coils, built-in thermal protection, all closed fan-cooled, continuous operation
- Protection class: IP44
- Insulation class: F

Application Fields

- Suitable for transferring water without abrasive particles or other liquid whose properties are similar to water.
- Widely used in garden irrigation, vegetable greenhouse water supply, breeding industry water supply and drainage, various corollary equipment, etc.

Optional Available On Request

- 304 stainless steel welding shaft
- Electrophoretic pump body and connections
- NSK bearing

Model Instruction

SHF (m) 6A (R)

- (R): Inlet+1"
- 6A: Type Range
- (m): Single-Phase, No "m": Three-Phase
- SHF: Centrifugal Pumps

Performance Curve

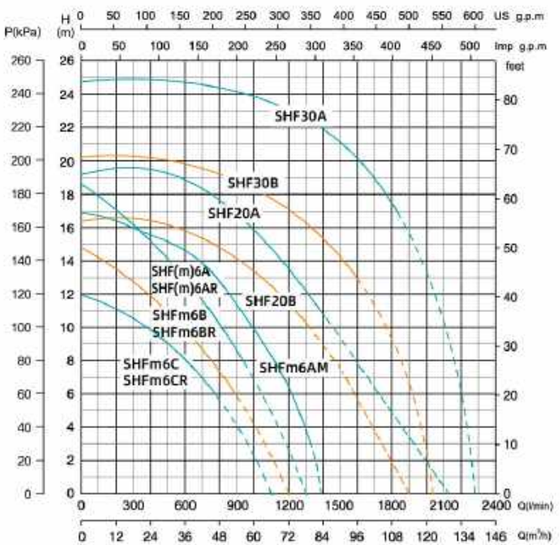

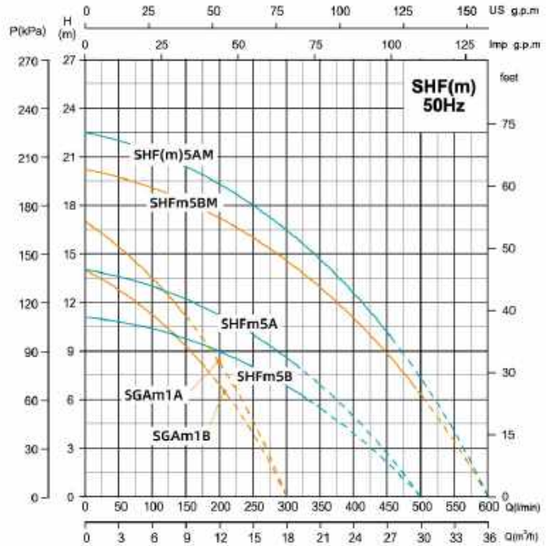

Model		Power		Max. Flow (m³/h)	Max. Head (m)	Head Range (m)	Max. Suction (m)
Single-Phase	Three-Phase	kW	HP				
SGAm1B	-	0.55	0.75	18	14	14~8	7
SGAm1A	-	0.75	1	18	17	17~11	7
SHFm5B	-	0.75	1	30	11	11~6	7
SHFm5A	-	1.1	1.5	30	14	14~8	7
SHFm5BM	-	1.1	1.5	36	20.2	20.2~7	7
SHFm5AM	SHF5AM	1.5	2	36	22.5	22.5~10	7
SHFm6AM	-	2.2	3	83	16.5	16.5~6	7
SHFm6C	-	1.1	1.5	66	11.9	11.9~6	7
SHFm6B	-	1.5	2	72	14.7	14.7~6	7
SHFm6A	SHF6A	2.2	3	78	18.5	18.5~8	7
SHFm6CR	-	1.1	1.5	66	11.9	11.9~6	7
SHFm6BR	-	1.5	2	72	14.7	14.7~6	7
SHFm6AR	SHF6AR	2.2	3	78	18.5	18.5~8	7
-	SHF20B	3	4	114	16.5	16.5~10	7
-	SHF20A	4	5.5	129	19.5	19.5~11	7
-	SHF30B	5.5	7.5	125	20	20~13	7
-	SHF30A	7.5	10	140	24.5	24.5~17	7

Note:The length of cable is 0.3m,The cable length of three-phase pump SHF5AM,SHF6A,SHF6AR are 0.3m;no plug. The rest of the model without cable

Components & Materials

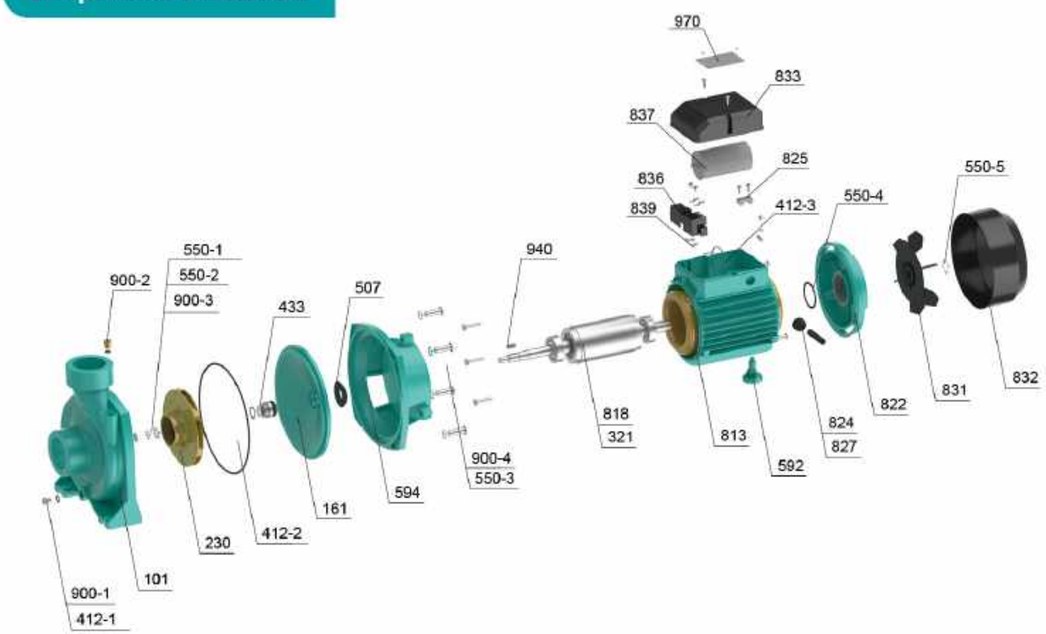

No.	Part name	No.	Part name	No.	Part name	No.	Part name
101	Pump body	550-1	Type I hexagon nut	822	Rear end cover	839	Insert spring
161	Pump cover	550-2	Spring washer	824	Cable	900-1	Slotted cheese head screw
230	Impeller	550-4	Wave spring	825	Cable pressing plate	900-2	Vent cock
321	Deep groove ball bearing	550-5	Circlip for shaft	827	Cable sheath	900-3	Flat washer
412-1	O-ring	507	Water retaining ring	831	Fan	900-4	Hexagon head bolt
412-2	O-ring	592	Foot	832	Fan cover	940	Ordinary flat key
412-3	O-ring	594	Connector	833	Junction box	970	Nameplate
433	Mechanical seal	813	Stator	836	Terminal block		
500-3	Spring washer	818	Rotor	837	Running capacitor		

Model	SGAm1A	SGAm1B	SHFm5A	SHFm5B	SHFm5AM	SHFm6AM	SHF5AM	SHFm5BM	SHFm6A	SHF6A
Capacitor(μF)	20 μF/450V	12 μF/450V	20 μF/450V	20 μF/450V	40 μF/450V	60μF/450V	/	25 μF/450V	35 μF/450V 250 μF/250V	/
End cap Bearing	6202-2RZ				6204-2RZ	6205-2RZ	6204-2RZ	6204-2RZ	6205-2RZ	6205-2RZ
Coupling Bearing	6202-2RZ				6204-2RZ	6304-2RZ	6204-2RZ	6204-2RZ	6304-2RZ	6304-2RZ
Motor Shaft	Steel 45#+304									
Mechanical Seal	301-14/21 S:A(P)Stationary seal ring ø30				155-17/30 B:A(P) Stationary seal ring ø26.9					
	A:Graphite B:Alumina ceramic S:RBSC P:NBR									
Motor Case	Aluminum									
Coupling	Cast Iron									
Pump Body	Cast Iron									
Impeller	Copper					Cast iron	Cast iron or Copper			

Model	SHFm6B	SHFm6C	SHFm6AR	SHF6AR	SHFm6BR	SHFm6CR	SHF20B	SHF20A	SHF30B	SHF30A
Capacitor(μF)	40 μF/450V	25 μF/450V	35 μF/450V 250 μF/250V	/	40 μF/450V	25 μF/450V	/	/	/	/
End cap Bearing	6204-2RZ	6204-2RZ	6205-2RZ	6205-2RZ	6205-2RZ	6205-2RZ	6205-2RS/C3Z2	6206-2RS/C3Z2	6206-2RS/C3Z2	6208-2RS/C3Z2
Coupling Bearing	6205-2RZ	6205-2RZ	6304-2RZ	6304-2RZ	6304-2RZ	6304-2RZ	6205-2RS/C3Z2	6206-2RS/C3Z2	6206-2RS/C3Z2	6208-2RS/C3Z2
Motor Shaft	Steel 45#+304						45+304 welding shaft			
Mechanical Seal	155-17/30 B:A(P) Stationary seal ring ø26.9						701-20/29 S:K(PC) Stationary seal ring ϕ35	701-25/31 S:K(PC) Stationary seal ringΦ40		701-28/32 S:K(PC)Stationary seal ring ϕ43
	A:Graphite B:Alumina ceramic S:RBSC P:NBR									
Motor Case	Aluminum									
Coupling	Cast Iron									
Pump Body	Cast Iron									
Impeller	Cast iron or Copper								Cast iron	

Dimensions & Weight

Model		DN1	DN2	Dim.(mm)										N.W. (kg)
Single-phase	Three-phase	Inch		A	B	C	E	F	L	H1	H2	H3	S	
SGAm1A	-	1.5	1.5	160	190	41	91	129	299	95	135	204	10	11.5
SGAm1B	-	1.5	1.5	160	190	41	91	129	299	95	135	204	10	10.5
SHFm5A	-	2	2	160	196	59	45	194	318	91	140	206	11	14
SHFm5B	-	2	2	160	196	59	45	194	318	91	140	206	11	13
SHFm5AM	SHF5AM	2	2	160	206	62	61	226	377	110	150	234	11	21/21.5
SHFm5BM	-	2	2	160	206	62	61	226	377	110	150	234	11	18.5
SHFm6AM	-	4	4	190	240	67	66	267	446.5	120	192	295	11	35.5
SHFm6A	SHF6A	3	3	180	230	68	68	257	438	120	192	279	12	35/32
SHFm6B	-	3	3	180	230	68	68	239	397	120	192	244	12	29
SHFm6C	-	3	3	180	230	68	68	239	397	120	192	244	12	28
SHFm6AR	SHF6AR	4	4	190	240	68	68	257	438	120	192	279	12	36/36
SHFm6BR	-	4	4	190	240	68	68	239	397	120	192	244	12	27.5
SHFm6CR	-	4	4	190	240	68	68	239	397	120	192	244	12	26.5
-	SHF20B	4	4	190	260	80	50	302	461	132	180	267	14	40
-	SHF20A	4	4	190	260	80	50	286	482	132	180	288	14	44
-	SHF30B	4	4	212	292	82	52	301	509	160	210	350	14	59
-	SHF30A	4	4	212	292	82	52	318	555	160	210	350	14	73

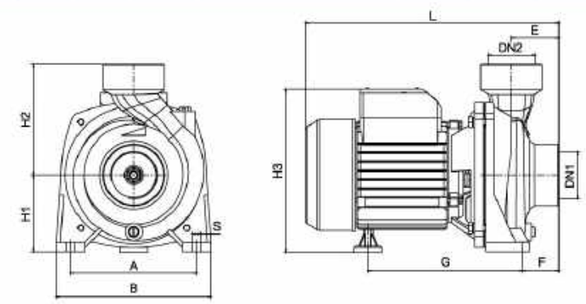

Model		Dim.(L×W×H)	G.W.(kg)		20'Loading Qty. (pcs)
Single-phase	Three-phase	mm	Single-phase	Three-phase	
SGAm1A	-	350×235×255	12	-	1520
SGAm1B	-	350×235×255	11	-	1520
SHFm5A	-	365×240×265	14.5	-	1386
SHFm5B	-	365×240×265	13.5	-	1386
SHFm5AM	SHF5AM	425×250×295	22.5	24.5	1024
SHFm5BM	-	425×250×295	20.5	-	1024
SHFm6AM	-	510×295×355	37.5	-	584
SHFm6A	SHF6A	510×295×355	37	35	584
SHFm6B	-	460×285×345	31	-	695
SHFm6C	-	460×285×345	28.5	-	695
SHFm6AR	SHF6AR	510×295×355	39	39	584
SHFm6BR	-	460×285×345	30.5	-	695
SHFm6CR	-	460×285×345	28.5	-	695
-	SHF20B	560×290×385	-	46	400
-	SHF20A	560×290×385	-	50	400
-	SHF30B	590×340×430	-	66	350
-	SHF30A	640×340×430	-	80	300

2SHFm1500

3SHFm2200

SHF(m)

Performance Range

Max. Flow: 114m³/h
Max. Head: 32m

Certificate

CE

Application Limits

- Suction head up to 7m
- Liquid temperature up to +40℃
- Ambient temperature up to +40℃
- Max. Working pressure: 3.6bar
- Voltage fluctuation should not exceed 10% of rated value.
- pH: 6.5 to 8.5

Basic Configuration

- Pump body: cast iron
- Impeller: brass/cast iron
- SHFm Shaft: 45#+304
- Mechanical seal: silicon carbide/graphite/nitrile rubber
- Motor: 2-pole asynchronous motor, copper coil, built-in thermal protection for 2.2kw and below, fully enclosed fan, continuous operation
- Protection class: IPX5
- Insulation class: F

Application Fields

- Suitable for transferring water without abrasive particles or other liquid whose properties are similar to water.
- widely used in garden irrigation, vegetable greenhouse water supply, breeding industry water supply and drainage varlous corollary equipment, etc

Optional Available On Request

- NSK bearing

Model Instruction

2 SHF (m) 1500

- Specification Code
- Single Phase
- Centrifugal Micro Pump - Axial Suction
- Nominal Inlet Diameter 1/25(mm)

Performance Curve

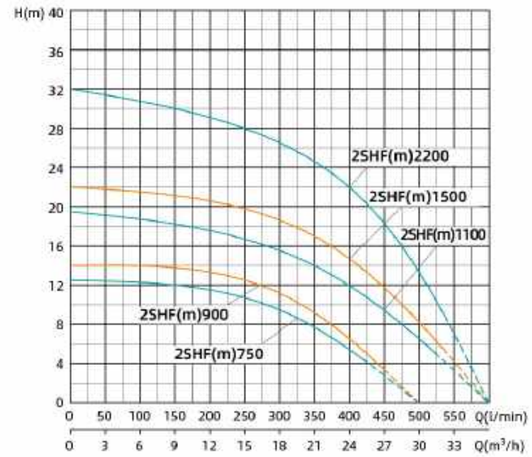

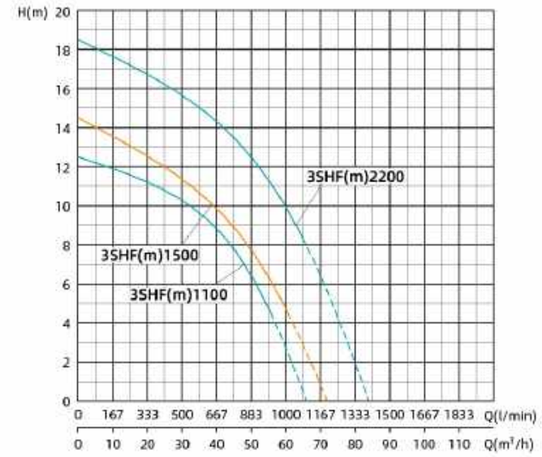

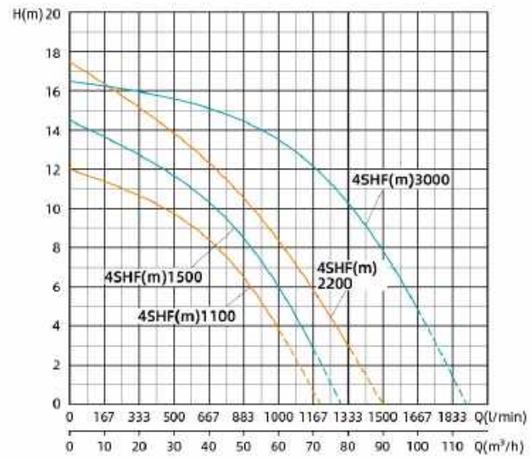

Model		Power		Max. Flow (m³/h)	Max. Head (m)	Head Range (m)	Max. Suction (m)
Single-Phase	Three-Phase	kW	HP				
2SHFm750	2SHF750	0.75	1	30	12.5	12.5~6	7
2SHFm900	2SHF900	0.9	1.2	30	14	14~8	7
2SHFm1100	2SHF1100	1.1	1.5	36	19.5	19.5~7	7
2SHFm1500	2SHF1500	1.5	2	36	22	22~10	7
2SHFm2200	2SHF2200	2.2	3	36	32	32~11	7
3SHFm1100	3SHF1100	1.1	1.5	66	12.5	12.5~4	7
3SHFm1500	3SHF1500	1.5	2	72	14.5	14.5~4	7
3SHFm2200	3SHF2200	2.2	3	84	18.5	18.5~4	7
4SHFm1100	4SHF1100	1.1	1.5	72	12	12~4	7
4SHFm1500	4SHF1500	1.5	2	78	14.5	14.5~4	7
4SHFm2200	4SHF2200	2.2	3	90	17.5	17.5~4	7
4SHFm3000	4SHF3000	3	4	114	16.5	16.5~4	7

Components & Materials

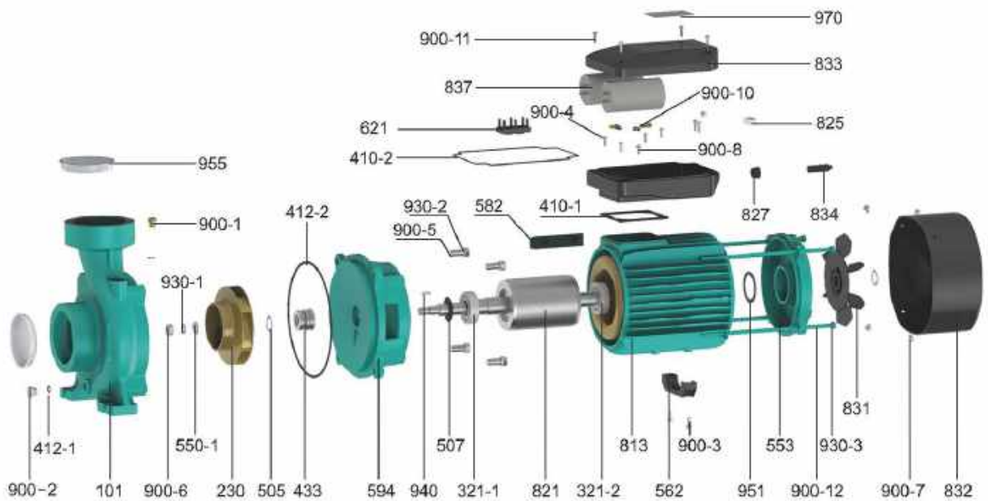

No.	Part name	No.	Part name	No.	Part name	No.	Part name
101	Pump body	550-2	Flat washer	833	Junction box	900-9	Nut
230	Impeller	553	End cap	834	Cable	900-10	Bolt
321-1	Bearing	562	Footing	837	Capacitance	900-11	Bolt
321-2	Bearing	582	Designation strip	839	Terminals	900-12	Bolt
410-1	Rubber blanket	594	Coupling	900-1	Vent cock	930-1	Spring washer
410-2	Rubber blanket	621	Terminal	900-2	Vent cock	930-2	Spring washer
412-1	O-ring	813	Stator	900-3	Bolt	930-3	Spring washer
412-2	O-ring	821	Rotor	900-4	Bolt	931	Spring washer
433	Mechanical seal	825	Cable platen	900-5	Bolt	940	Flat key
505	Check ring	827	Cable platen	900-6	Nut	951	Wave spring
507	Washer	831	Fan	900-7	Bolt	955	Dust cap
550-1	Flat washer	832	Fan housing	900-8	Bolt	970	Designation strip

Model	2SHFm 750	2SHFm 900	2SHFm 1100	2SHFm 1500	2SHFm 2200	3SHFm 1100	3SHFm 1500	3SHFm 2200
Capacitor(μF)	18μF\450V	25μF\450V	30μF\450V	50μF\450V	90μF\450V	30μF\450V	50μF\450V	90μF\450V
End cap Bearing	6202-2RZ	6202-2RZ	6204-2RZ	6204-2RZ	6205-2RZ	6204-2RZ	6204-2RZ	6205-2RZ
Coupling Bearing	6202-2RZ	6202-2RZ	6204-2RZ	6204-2RZ	6304-2RZ	6204-2RZ	6204-2RZ	6304-2RZ
Motor Shaft	Steel 45#+304							
Mechanical Seal	108-14/25&S:A(PC)		108-16/25 &Stationary seal ring 30 &S:A(PC)		108-20/25 &Stationary seal ring d35&S:A(RC)	108-16/25 &Stationary seal ring 30 &S:A(PC)		108-20/25 &Stationary seal ring d35&S:A(RC)
Motor Case	Aluminum							
Coupling	Cast Iron							
Pump Body	Cast Iron							
Impeller	Copper		Cast iron or Copper		Copper	Cast iron or Copper		

Model	4SHFm 1100	4SHFm 1500	4SHFm 2200	4SHFm 3000	2SHF 750	2SHF 900	2SHF 1100	2SHF 1500
Capacitor(μF)	30μF\450V	50μF\450V	90μF\450V	100μF\450V	/	/	/	/
End cap Bearing	6204-2RZ	6204-2RZ	6205-2RZ	6205-2RZ	6202-2RZ	6202-2RZ	6204-2RZ	6204-2RZ
Coupling Bearing	6204-2RZ	6204-2RZ	6304-2RZ	6304-2RZ	6202-2RZ	6202-2RZ	6204-2RZ	6204-2RZ
Motor Shaft	Steel 45#+304							
Mechanical Seal	108-16/25 &Stationary seal ring 30 &S:A(PC)		108-20/25 &Stationary seal ring d35 &S:A(RC)		108-14/25 &S:A(PC)		108-16/25 & Stationary seal ring 30 &S:A(PC)	
Motor Case	Aluminum							
Coupling	Cast Iron							
Pump Body	Cast Iron							
Impeller	Cast iron or Copper				Copper		Cast iron or Copper	

Model	2SHF 2200	3SHF 1100	3SHF 1500	3SHF 2200	4SHF 1100	4SHF 1500	4SHF 2200	4SHF 3000
Capacitor(μF)	/	/	/	/	/	/	/	/
End cap Bearing	6205-2RZ	6204-2RZ	6204-2RZ	6205-2RZ	6204-2RZ	6204-2RZ	6205-2RZ	6205-2RZ
Coupling Bearing	6304-2RZ	6204-2RZ	6204-2RZ	6304-2RZ	6204-2RZ	6204-2RZ	6304-2RZ	6304-2RZ
Motor Shaft	Steel 45#+304							
Mechanical Seal	108-20/25 &Stationary seal ring d35&S:A(RC)	108-16/25 &Stationary seal ring 30 &S:A(PC)		108-20/25 &Stationary seal ring d35&S:A(RC)	108-16/25 &Stationary seal ring 30 &S:A(PC)		108-20/25 &Stationary seal ring d35 &S:A(RC)	
Motor Case	Aluminum							
Coupling	Cast Iron							
Pump Body	Cast Iron							
Impeller	Copper	Cast iron or Copper						

Dimensions & Weight

Model	DN1	DN2	Dim.(mm)									
			A	B	C	D	E	F	S	H1	H2	H3
4SHFm3000	100	100	190	248	80	30	268	464	14	132	180	296
4SHFm2200	100	100	170	225	67	47	246	439	12	114	173	277
4SHFm1500	100	100	170	225	67	47	210.5	370.5	12	114	173	238
4SHFm1100	100	100	170	225	67	47	210.5	370.5	12	114	173	238
3SHFm2200	80	80	170	225	66	46	248	440	12	114	185	278
3SHFm1500	80	80	170	225	66	47.5	212.5	371.5	12	114	185	247
3SHFm1100	80	80	170	225	66	47.5	212.5	371.5	12	114	185	247
2SHFm2200	50	50	170	225	63	43	237	426	12	114	180	290
2SHFm1500	50	50	140	202	53.5	33.5	201.5	348	12	114	163	238
2SHFm1100	50	50	140	202	53.5	33.5	201.5	348	12	114	163	238
2SHFm900	50	50	125	160	57	41	176.5	315	9	95	139	206.5
2SHFm750	50	50	125	160	57	41	176.5	315	9	95	139	206.5
4SHF3000	100	100	190	248	80	30	268	464	14	132	180	259.5
4SHF2200	100	100	170	225	67	47	246	439	12	114	173	241.5
4SHF1500	100	100	170	225	67	47	210.5	370.5	12	114	173	227.5
4SHF1100	100	100	170	225	67	47	210.5	370.5	12	114	173	227.5
3SHF2200	80	80	170	225	66	46	248	440	12	114	185	241.5
3SHF1500	80	80	170	225	66	47.5	212.5	371.5	12	114	185	227.5
3SHF1100	80	80	170	225	66	47.5	212.5	371.5	12	114	185	227.5
2SHF2200	50	50	170	225	63	43	237	426	12	114	180	241.5
2SHF1500	50	50	140	202	53.5	33.5	201.5	348	12	114	163	227.5
2SHF1100	50	50	140	202	53.5	33.5	201.5	348	12	114	163	227.5
2SHF900	50	50	125	160	57	41	176.5	315	9	95	139	199.5
2SHF750	50	50	125	160	57	41	176.5	315	9	95	139	199.5

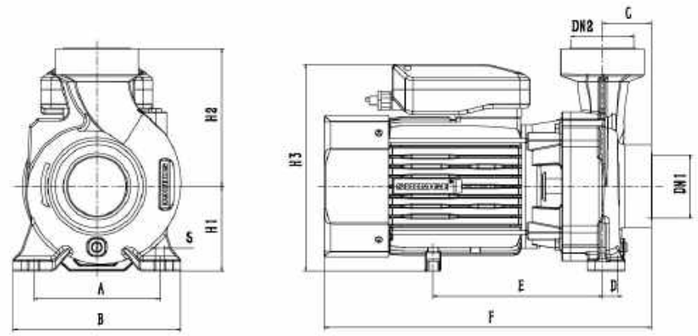

Model		Dim. (L*W*H)mm	N.W(kg)		Dim.For Outer Packing (L*W*H)mm	G.W.(kg)		Packing Qty. (pcs)	20"LoadinE Qty.(pcs)
Single-Phase	Three-Phase		Single Phase	Three Phase		Single Phase	Three Phase		
2SHFm750	2SHF750	315×160×234	12.5	12.5	360×215×300	13	13	1	1120
2SHFm900	2SHF900	315×160×234	14	13.5	360×215×300	14.5	14	1	1120
2SHFm1100	2SHF1100	348×202×277	20.5	19.5	410×275×370	22	21	1	672
2SHFm1500	2SHF1500	348×202×277	22.5	20.5	410×275×370	24	22	1	672
2SHFm2200	2SHF2200	426×225×294	31.5	27	500×290×380	34	29.5	1	528
3SHFm1100	3SHF1100	371.5×225×299	23	21	430×290×380	24	22	1	624
3SHFm1500	3SHF1500	371.5×225×299	24.5	22.5	430×290×380	26	24	1	624
3SHFm2200	3SHF2200	440×225×299	33	28.5	500×290×380	35.5	31	1	528
4SHFm1100	4SHF1100	370.5×225×287	23	21	430×290×380	24	22	1	624
4SHFm1500	4SHF1500	370.5×225×287	24.5	22.5	430×290×380	26	24	1	624
4SHFm2200	4SHF2200	439×225×287	33	28.5	500×290×380	35.5	31	1	528
4SHFm3000	4SHF3000	464×248×312	41.5	40	535×290×410	47.5	46	1	440

2SGP(m)

Performance Range

Max. Flow: 13m³/h
Max. Head: 60m

Certificate

CE

Application Limits

- Suction head up to 8m
- Liquid temperature up to +40℃
- Ambient temperature up to +40℃
- Max. Working pressure: 7bar
- Voltage fluctuation should not exceed 10% of rated value.
- pH: 6.5 to 8.5

Motor

- Single-Phase 220V/50Hz
- Mechanical seal: Ceramic /Graphite/NBR rubber
- Motor: 2 pole asynchronous motor, copper wires, built-in thermal protector, fully closed fan cooling, continuous running
- Protection class: IP44
- Insulation class: F

Application Fields

- Suitable for transferring water without abrasive particles or other liquid whose properties are similar to water.
- Widely used in garden irrigation, vegetable greenhouse water supply, breeding industry water supply and drainage, various corollary equipment, etc.

Optional Available On Request

- NSK bearing

Model Instruction

2SGP (m) 25 130

- 130 — Impeller Dimensions
- 25 — Inlet Inch
- (m) — Single-Phase, No "m": Three-Phase
- 2SGP — Two Impeller Centrfugal Pumps

Performance Curve

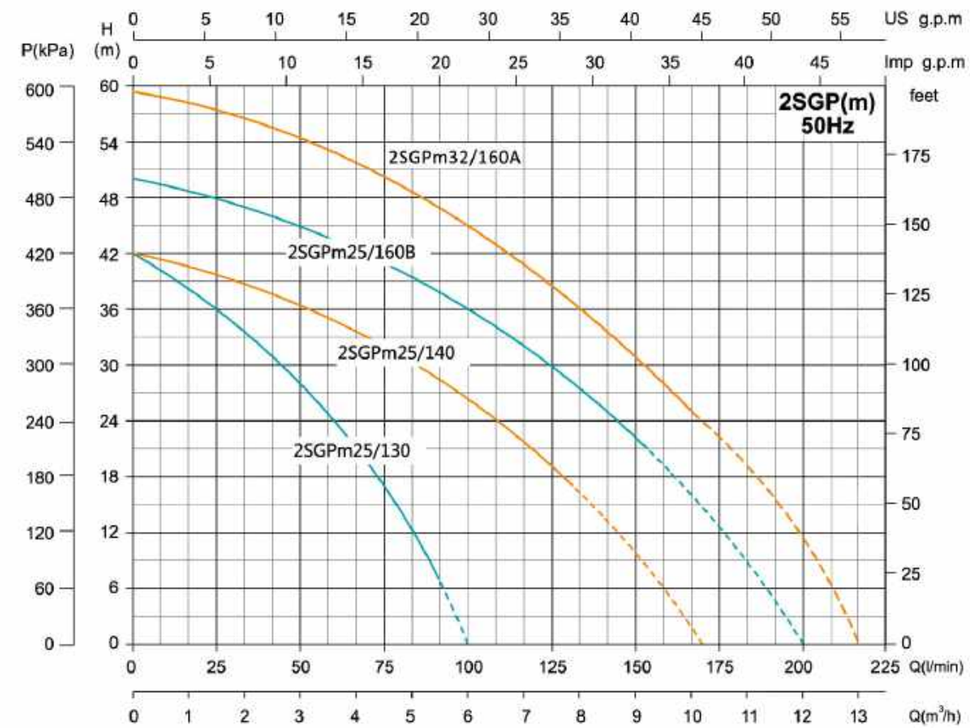

Model	Power		Max. Flow (m³/h)	Max. Head (m)	Head Range (m)	Max. Suction (m)
Single-Phase	kW	HP				
2SGPm25/130	0.75	1	6	42	42~7	8
2SGPm25/140	1.1	1.5	10.2	42	42~12	7
2SGPm25/160B	1.5	2	12	50	50~22	7
2SGPm32/160A	2.2	3	13	60	60~20	7

Components & Materials

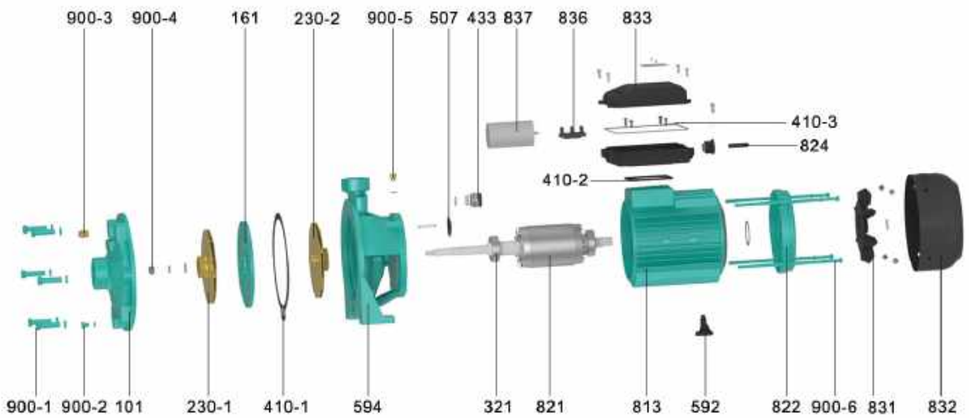

No.	Component	No.	Component	No.	Component
101	Pump body	507	Water retaining ring	833	Junction Box
161	Pump cover	592	Feet	836	Terminal
230-1	Impeller (I)	594	Coupling	837	Running capacitor
230-2	Impeller (II)	813	stator	900-1	Hexagon head bolts full thread
321	Deep groove ball bearing	821	Rotor	900-2	Slotted cheese head screws
410-1	Seal (flat)	822	Back cover	900-3	Vent cock
410-2	Rubber gasket	824	Cable	900-4	Type 1 hex nut
410-3	Rubber gasket	831	fan	900-5	Vent cock
433	Machinery Seal	832	Fan cover	900-6	Hexagon head bolts

Model	2SGPm25/130	2SGPm25/140	2SGPm25/160B	2SGPm32/160A
Capacitor(μF)	20μF/450V	40μF/450V	45μF/450V	60μF/450V
Bearing	6202-2RZ	6204-2RZ		6205-2RZ，6304-2RZ
Motor Shaft	304+steel 45#			
Machinery Seal	103-12/20.5 B:A(P)	155-17/30 S:A(P)/Stationary seal ring ø27 L pad		
	A:Graphite B:Ceramic P:NBR			
Motor Case	Aluminum			
Coupling	Cast iron			
Pump Body	Cast iron			
Impeller	Brass		304	Brass

Dimensions & Weight

Model	DN1	DN2	Dim.(mm)										N.W. (kg)
Single-phase	Inch		A	B	C	E	F	G	L	S	H1	H2	
2SGPm25/130	1.25	1	140	185	192	82	21	148.5	339	10	112	145	15
2SGPm25/140	1.5	1	165	210	215	88	34	185	395.5	10	112	150	22
2SGPm25/160B	1.5	1	165	210	215	88	34	185	395.5	10	112	150	25
2SGPm32/160A	1.5	1.25	180	225	235	86	31	196	427	12	128	168	29.6

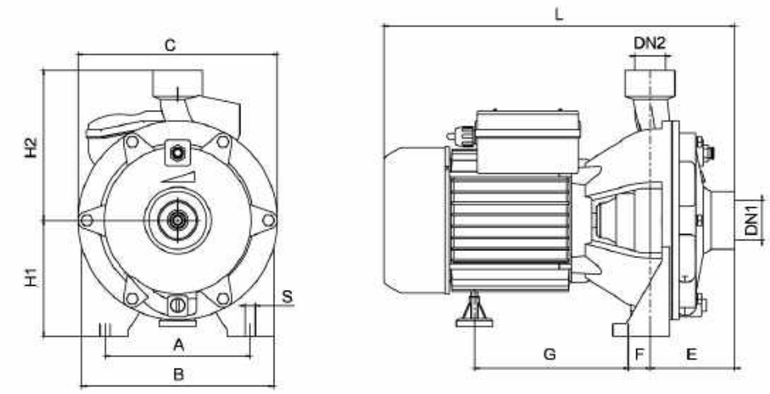

Model Single-phase	Dim.(L×W×H) mm	G.W.(kg) Single-phase	20"Loading Qty.(pcs)
2SGPm25/130	400×250×295	17	1270
2SGPm25/140	460×270×315	24	885
2SGPm25/160B	460×270×315	27	885
2SGPm32/160A	490×300×355	31.6	584

SGT

Performance Range

Max. Flow: 120m³/h
Max. Head: 52m

Certificate

CE

Application Limits

- Suction head up to 7m
- Liquid temperature up to +40℃
- Ambient temperature up to +40℃
- Max. Working pressure: 10bar
- Voltage fluctuation should not exceed 10% of rated value.
- pH: 6.5 to 8.5

Motor

- Three-Phase 380V/50Hz
- Motor: 2 pole asynchronous motor, copper wires, built-in thermal protector, fully closed fan cooling, continuous running
- Protection class: IP44
- Insulation class: F

Application Fields

- Suitable for transferring water without abrasive particles or other liquid whose properties are similar to water.
- Widely used in industrial and urban water supply, high-rise building boosting, fire protection system, breeding

Optional Available On Request

- NSK bearing

Model Instruction

SGT 32-160/1.5

- Rated Power 1/1000 (W)
- Impeller Dimensions
- Inlet Inch
- Centrifugal Pumps

Performance Curve

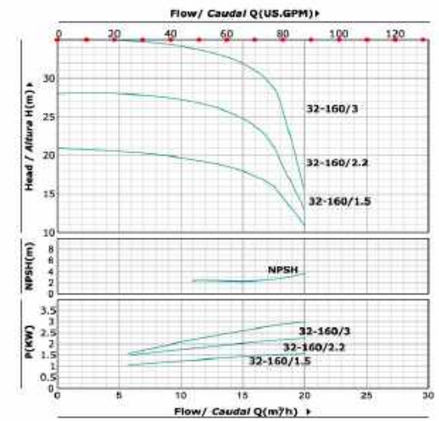

32-160

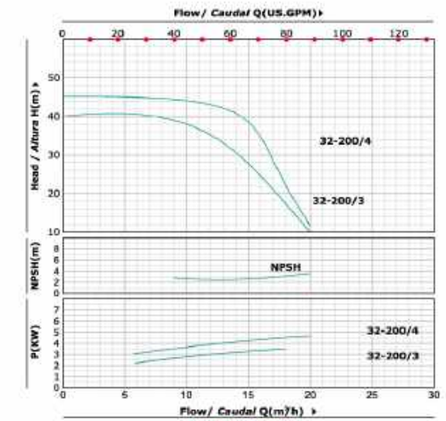

32-200

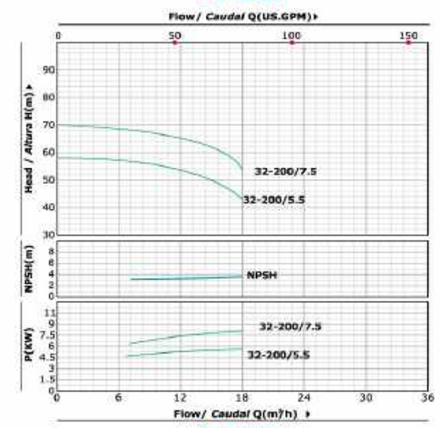

32-200

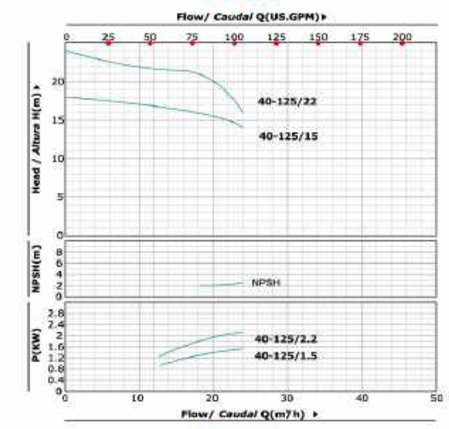

40-125

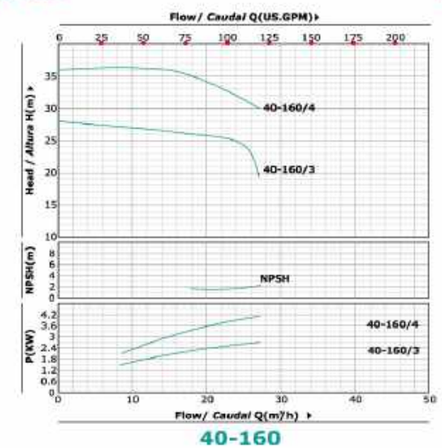

40-160

Performance Curve

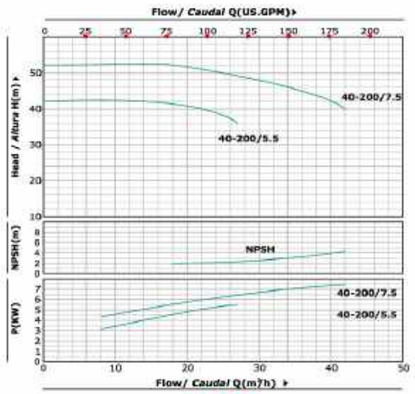

40-200

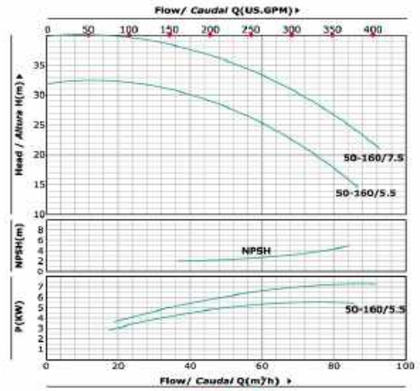

50-160

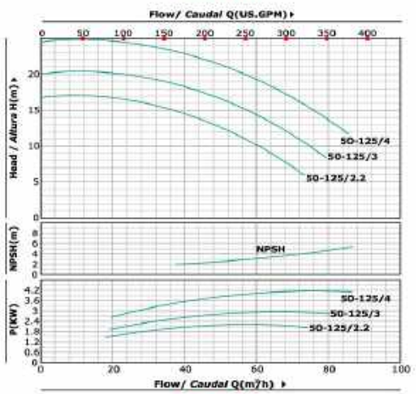

50-125

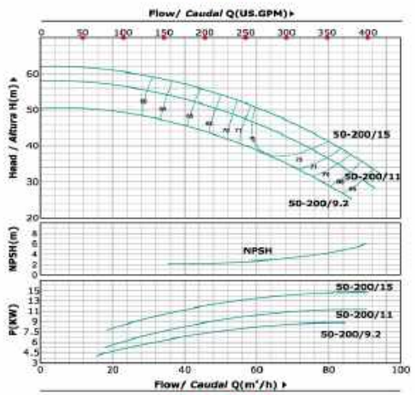

50-200

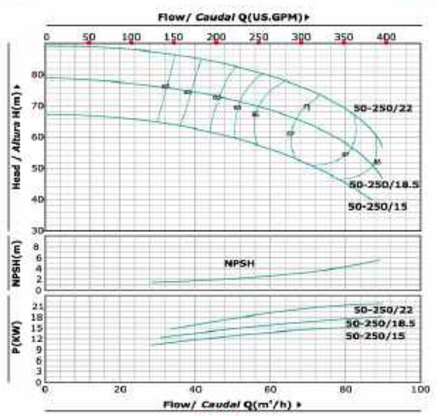

50-250

Performance Curve

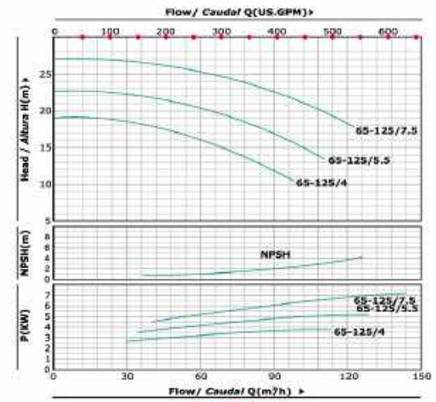

65-125

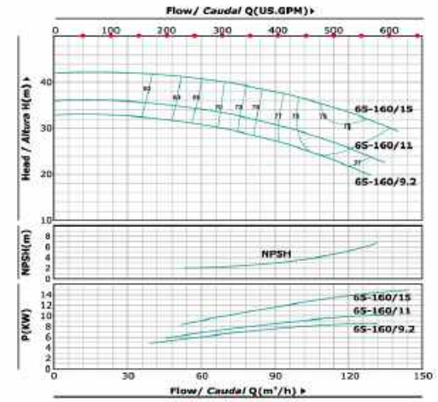

65-160

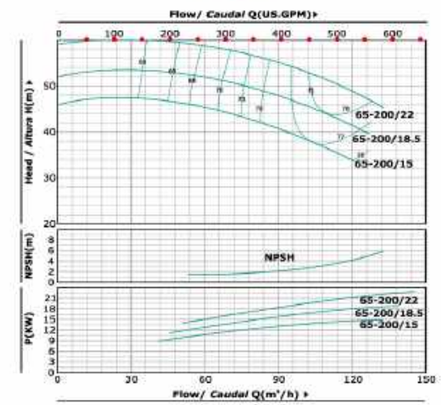

65-200

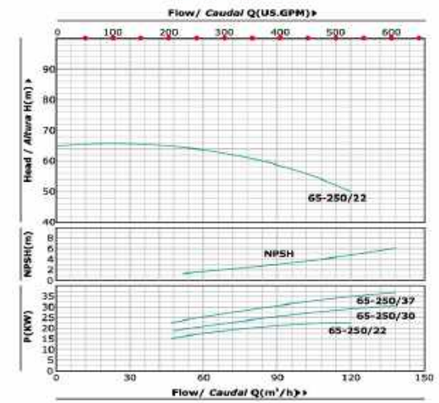

65-250

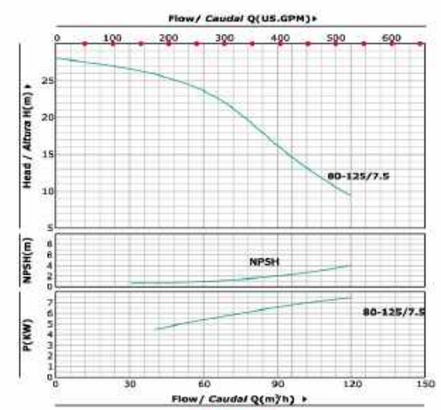

80-125

Performance Curve

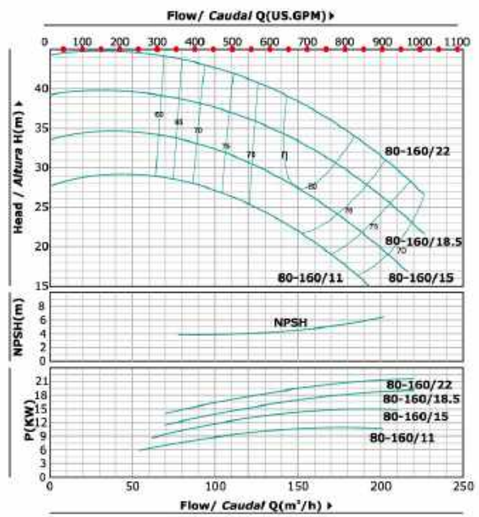

80-160

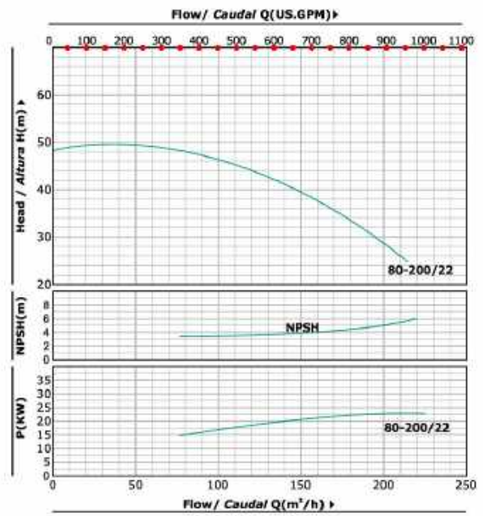

80-200

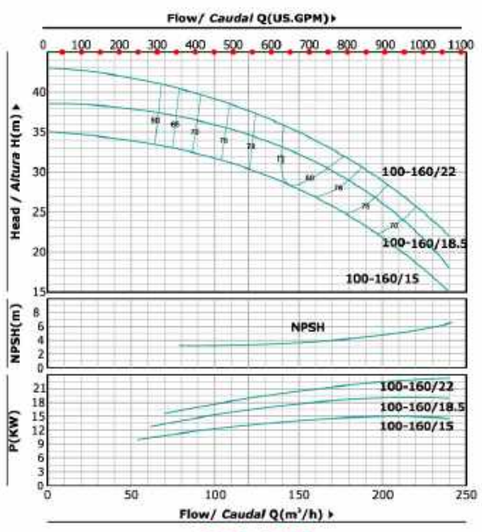

100-160

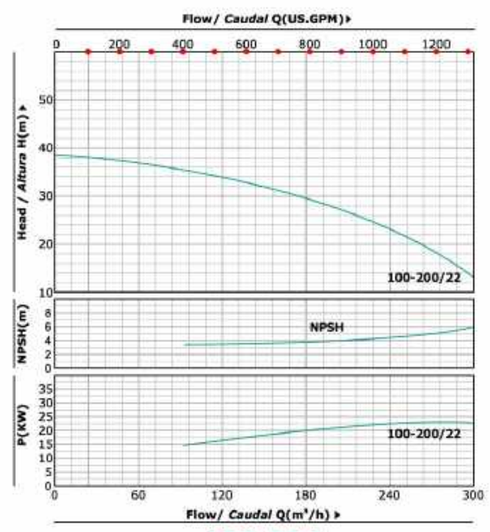

100-200

Model	power		Rated point		Caliber	l/min	0	100	150	250	300	400	450	600	700	800	900	1200	1400	1500	1800	2000	2300	3000
	kW	HP	m³/h	m	mm	m³/h	0	6	9	15	18	24	27	36	42	48	54	72	84	90	108	120	138	180
SGT32-160/1.5	1.5	2	15	18	50×32	H (m)	21		20	18	16.5													
SGT32-160/2.2	2.2	3	15	25	50×32		28		27.5	25	19													
SGT32-160/3	3	4	15	32	50×32		35		34.5	32	27													
SGT32-200/3	3	4	13	30	50×32		40		38	29	20													
SGT32-200/4	4	5.5	15	38	50×32		45		45	38	35													
SGT32-200/5.5	5.5	7.5	15	50	50×32		58		56	50	43													
SGT32-200/7.5	7.5	10	15	62	50×32		70		67	62	54													
SGT40-125/1.5	1.5	2	20	15	65×40		18		17	16.5	16	14												
SGT40-125/2.2	2.2	3	20	20	65×40		24		22	21.5	21	16												
SGT40-160/3	3	4	25	24	65×40		28		27	26.5	26	25	19.5											
SGT40-160/4	4	5.5	25	32	65×40		36			36	35	32.5	30											
SGT40-200/5.5	5.5	7.5	25	38	65×40		42			42	41	38.5	36	24										
SGT40-200/7.5	7.5	10	25	48	65×40		52			52	52	49	48	46	40									
SGT50-125/2.2	2.2	3	50	12	65×50		17							15.4	14	12.8	11.5	6.5						
SGT50-125/3	3	4	55	15	65×50		20							18.8	18	17	15.6	11						
SGT50-125/4	4	5.5	60	18	65×50		24							23.1	23	21.5	20.3	15.8	11.8					
SGT50-160/5.5	5.5	7.5	50	27	65×50		32							30.6	30	28	26.6	20.5	14.8					
SGT50-160/7.5	7.5	10	60	28	65×50		40							38	36	34	30	26	21					
SGT50-200/9.2	9.2	12.5	48	43	65×50		50.5							46.8	45	43	40.9	32.5	26.7					
SGT50-200/11	11	15	60	45	65×50		57.5							53.5	52	50	47.5	40	34	29				
SGT50-200/15	15	20	65	50	65×50		62							58	56.5	54.5	52	44.5	39	35.5				
SGT50-250/15	15	20	50	60	65×50		68.5							64	63	61.5	59	50	41					
SGT50-250/18.5	18.5	25	55	70	65×50		79							75.8	74.8	74	71.5	63.5	55.5	47				
SGT50-250/22	22	30	60	75	65×50		89.5							86	85.3	84	81.5	73.5	65.5	57				
SGT65-125/4	4	5.5	62	16	80×65		19									17.3	16.8	14.5	13	11.8				
SGT65-125/5.5	5.5	7.5	74	19	80×65		23									21.3	20.9	19	17.5	16.7	13.7			
SGT65-125/7.5	7.5	10	85	20	80×65		27									26	25	23	20	19	18	16		
SGT65-160/9.2	9.2	12.5	72	30	80×65		33										31.5	30	28	27.1	24	21.5		
SGT65-160/11	11	15	74	33	80×65		36										34.5	33	31.5	30.8	28	25.5		
SGT65-160/15	15	20	85	38	80×65		42										41	40	38.5	37.8	35	33	29.5	
SGT65-200/15	15	20	62	44	80×65		45										45.5	43	41	40.2	36.5	34		
SGT65-200/18.5	18.5	25	74	50	80×65		52										52.3	51	49	48.2	44.5	42		
SGT65-200/22	22	30	85	54	80×65		59										59.5	58	56	55	52	49.5	44.5	
SGT65-250/22	22	30	84	60	80×65		64.8										64.7	62	60	58.5	53	50		
SGT80-125A/7.5	7.5	10	85	18	100×80		28									25	24.5	22	19	16.5	10.5			

Model	power		Rated point		Caliber	l/min	0	1000	1500	2000	2400	3000	3333	3500	3666	4000	4666	5000	6000	6666	8333	10000	13333	16666
	kW	HP	m³/h	m	mm	m³/h	0	60	90	120	144	180	200	210	220	240	280	300	360	400	500	600	800	1000
SGT80-160/11	11	15	130	22.5	100×80	H (m)	27	27	27.3	24.5	21.1	16												
SGT80-160/15	15	20	145	27	100×80		32.8	32.6	32.5	30	27	22.1	18.5	16.7										
SGT80-160/18.5	18.5	25	160	31	100×80		39	38.5	38	35	33.6	28.8	25.3	23.5										
SGT80-160/22	22	30	160	35	100×80		44	43.5	43	41.7	38.6	33.8	30.3	28.5										
SGT80-200/22	22	30	130	42	100×80		48	47.7	47.5	43.5	39.2	32.5	27.2	24.5										
SGT100-160/15	15	20	180	24.5	125×100		35	33.5	32.5	30	27.8	24.5	21.5	20	18.3	15								
SGT100-160/18.5	18.5	25	180	29	125×100		38.5	37.5	36.5	34.3	32.2	29	25.7	24	22	18								
SGT100-160/22	22	30	180	31.5	125×100		43	41	40	37.6	35.2	31.5	28.5	27	25.3	22								
SGT100-200/22	22	30	150	32	125×100		38.5	36.7	35.7	33.8	31.7	28.5	26.8	26	25	22.9	16.3	13						

Components & Materials

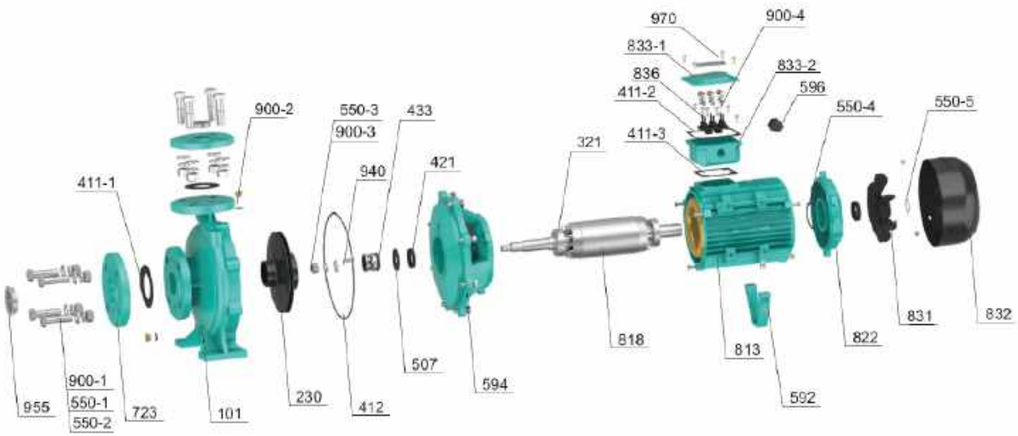

No.	Component	No.	Component	No.	Component
101	Pump body	550-4	Wave spring	836	Wiring terminal
230	Pump cover	550-5	Circlip for shaft	900-1	Hexagon head bolt
321	Impeller (I)	592	Foot	900-2	Vent cock
411-1	Impeller (II)	594	Connector	900-3	Flat washer
411-2	Deep groove ball bearing	596	Cable lock	900-4	Cross recessed pan head screw
411-3	Seal (flat)	723	Flange	940	Ordinary flat key
412	Rubber gasket	813	Stator	955	Dust cover
421	Rubber gasket	818	Rotor	970	Nameplate
433	Machinery Seal	822	Rear end cover		
507	Water retaining ring	831	Fan		
550-1	Spring washer	832	Fan cover		
550-2	Type I hexagon nut	833-1	Junction box cover		
550-3	Type I hexagon nut	833-2	Junction box		

Components & Materials

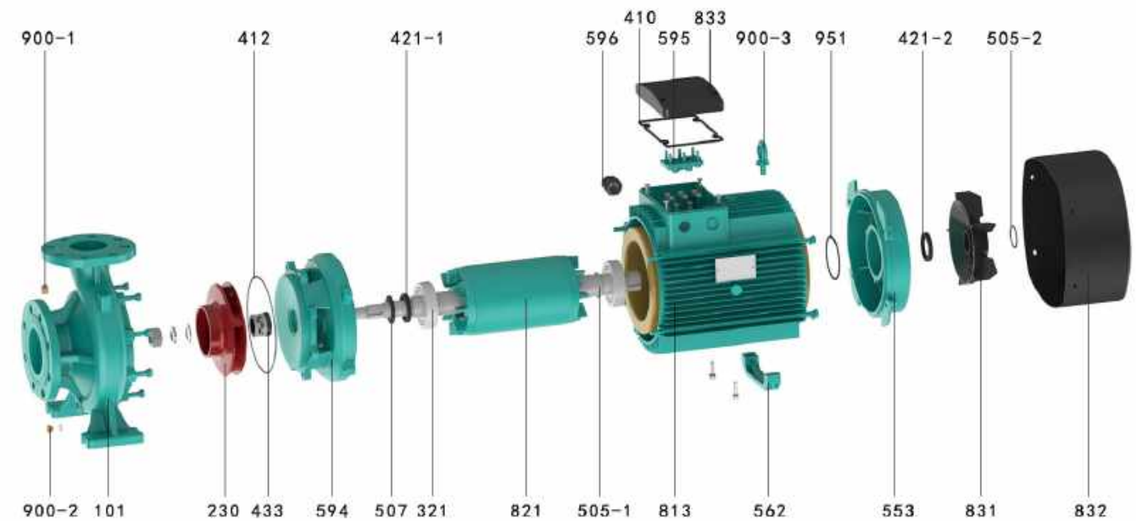

No.	Component	No.	Component	No.	Component	No.	Component	No.	Component
101	Pump body	421-1	Framework oil seal	507	Washer	596	Cable lock head	833	Junction box
230	Impeller	421-2	Framework oil seal	553	End cap	813	Stator	951	Wave spring
321	Bearing	433	Mechanical seal	562	Footing	821	Rotor	900-1	Vent cock
410	Rubber blanket	505-1	Check ring	594	Coupling	831	Fan	900-2	Vent cock
412	O-ring	505-2	Check ring	595	Terminal	832	Fan housing	900-3	Lifting bolt

Power (kW)	1.5	2.2	3	4	5.5	7.5
End-cover bearing	6204-2RS/C3Z2	6204-2RS/C3Z2	6205-2RS/C3Z2	6206-2RS/C3Z2	6206-2RS/C3Z2	6208-2RS/C3Z2
Coupling bearing	6205-2RS/C3Z2	6205-2RS/C3Z2	6205-2RS/C3Z2	6206-2RS/C3Z2	6206-2RS/C3Z2	6208-2RS/C3Z2
Motor Shaft	Steel 45#+304					
Mechanical Seal	701-20/29 S:K(P)Stationary seal ring ø35			701-25/31 S:K(P)Stationary seal ring ø40		701-28/32 S:K(P) Stationary seal ring ø40
	A:Graphite B:Alumina ceramic S:RBSC P:NBR					
Motor Case	Aluminum					
Coupling	Cast Iron					
Pump body	Cast Iron					
Impeller	Cast Iron					
Pump Cover	Cast Iron					

Dimensions & Weight

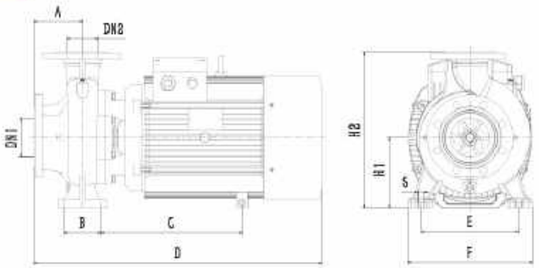

Model	DN1	DN2	A	B	C	D	E	F	S	H1	H2
SGT32-160/1.5	50	32	80	70	202	411	190	240	14	132	292
SGT32-160/2.2	50	32	80	70	210	445	190	240	14	132	292
SGT32-160/3	50	32	80	70	226	451	190	240	14	132	292
SGT32-200/3	50	32	80	70	228	453	190	240	14	160	340
SGT32-200/4	50	32	80	70	219	480	190	240	14	160	340
SGT32-200/5.5	50	32	80	70	229	500	190	240	14	160	340
SGT32-200/7.5	50	32	80	70	246	550	190	240	14	160	340
SGT40-125/1.5	65	40	80	70	202	411	160	210	14	112	252
SGT40-125/2.2	65	40	80	70	210	444.5	160	210	14	112	252
SGT40-160/3	65	40	80	70	231	456	175	210	14	126	286
SGT40-160/4	65	40	80	70	221	481.5	175	210	14	126	286
SGT40-200/5.5	65	40	100	70	226	517	215	265	14	260	340
SGT40-200/7.5	65	40	100	70	243	567	215	265	14	260	340
SGT50-125/2.2	65	50	93.5	60	241	471	168	232	14	132	305
SGT50-125/3	65	50	93.5	60	257	477	168	232	14	132	305
SGT50-125/4	65	50	93.5	60	250	505	168	232	14	132	305
SGT50-160/5.5	65	50	100	70	221	510	215	273	14	160	349
SGT50-160/7.5	65	50	100	70	240	564	215	273	14	160	349
SGT50-200/9.2	65	50	100	95	267.5	585	250	320	14	180	385
SGT50-200/11	65	50	100	95	305.5	623	250	320	14	180	385
SGT50-200/15	65	50	100	95	307.5	660	250	320	14	180	385
SGT50-250/15	65	50	100	95	307.5	660	250	320	14	180	410
SGT50-250/18.5	65	50	100	95	307.5	660	250	320	14	180	410
SGT50-250/22	65	50	100	95	351.5	704	250	320	14	180	410
SGT65-125/4	65	50	108	95	214.5	515	210	280	14	160	349
SGT65-125/5.5	65	50	108	95	222.5	536	210	280	14	160	349
SGT65-125/7.5	80	65	110	95	237.5	584	210	280	14	160	349
SGT65-160/9.2	80	65	108	95	282.5	608	215	280	14	180	370
SGT65-160/11	80	65	108	95	320.5	646	215	280	14	180	370
SGT65-160/15	80	65	108	95	322.5	683	215	316	14	180	390
SGT65-200/15	80	65	108	95	328.5	689	250	320	14	180	423
SGT65-200/18.5	80	65	108	95	328.5	689	250	320	14	180	423
SGT65-200/22	80	65	108	95	372.5	733	250	320	14	180	423
SGT65-250/22	80	65	110	95	375.5	738	250	320	14	180	415
SGT80-125A/7.5	100	80	100	70	248	572	215	265	14	160	340
SGT80-160/11	100	80	125	95	320.5	663	250	326	14	180	420
SGT80-160/15	100	80	125	95	322.5	700	250	326	14	180	420
SGT80-160/18.5	100	80	125	95	322.5	700	250	326	14	180	420
SGT80-160/22	100	80	125	95	366.5	744	250	326	14	180	420
SGT80-200/22	100	80	125	95	361.5	739	250	320	14	180	400
SGT100-160/15	125	100	125	95	323.5	701	250	336	14	180	433
SGT100-160/18.5	125	100	125	95	323.5	701	250	336	14	180	433
SGT100-160/22	125	100	125	95	367.5	745	250	336	14	180	433
SGT100-200/22	125	100	125	95	367.5	745	250	336	14	180	433

Packing Size & Weight

Model	Net weight(kg)	Gross weight(kg)	Packaging box dimensions L×W×H(mm)
SGT32-160/1.5	32	35	490x285x355
SGT32-160/2.2	37	40	520x385x355
SGT32-160/3	40	43	565x275x390
SGT32-200/3	43	47	560x325x440
SGT32-200/4	52	57	590x325x440
SGT32-200/5.5	63.5	68.5	610x325x440
SGT32-200/7.5	74	79	660x325x440
SGT40-125/1.5	31	34	490x255x315
SGT40-125/2.2	37	40	520x255x315
SGT40-160/3	43	48	565x275x390
SGT40-160/4	51	56	590x275x390
SGT40-200/5.5	61	66	630x300x440
SGT40-200/7.5	73.5	83.5	680x300x440
SGT50-125/2.2	40	43	590x275x390
SGT50-125/3	44	48	590x275x390
SGT50-125/4	48	53	610x325x440
SGT50-160/5.5	59	64	630x320x505
SGT50-160/7.5	82	90	680x320x505
SGT50-200/9.2	90	98	685x320x505
SGT50-200/11	98	110	740x360x540
SGT50-200/15	124	136	740x360x540
SGT50-250/15	128	140	740x360x540
SGT50-250/18.5	141	153	740x360x540
SGT50-250/22	155	167	815x370x525
SGT65-125/4	59	64	630x320x505
SGT65-125/5.5	65	70	630x320x505
SGT65-125/7.5	88	96	685x320x505
SGT65-160/9.2	93	105	685x320x505
SGT65-160/11	102	114	740x360x540
SGT65-160/15	129	141	740x360x540
SGT65-200/15	128	140	815x370x525
SGT65-200/18.5	142	154	815x370x525
SGT65-200/22	155	167	815x370x525
SGT65-250/22	158	170	815x370x525
SGT80-125A/7.5	75.5	84.5	700x300x450
SGT80-160/11	107	119	740x360x540
SGT80-160/15	134	146	815x370x555
SGT80-160/18.5	148	160	815x370x555
SGT80-160/22	161	173	815x370x555
SGT80-200/22	158	170	815x370x555
SGT100-160/15	140	152	815x370x555
SGT100-160/18.5	153	165	815x370x555
SGT100-160/22	167	179	815x370x525
SGT100-200/22	167	179	815x370x525

PXm

Performance Range

Max. Flow: 14m³/h
Max. Head: 45m

Certificate

CE

Application Limits

- Suction head up to 7m
- Liquid temperature up to +40℃
- Ambient temperature up to +40℃
- Max. Working pressure: 7bar
- Voltage fluctuation should not exceed 10% of rated value.
- pH: 6.5 to 8.5

Basic Configuration

- Mechanical sealing: ceramic / graphite / NBR rubber
- Motor: two asynchronous motors, copper coils, built-in thermal protection, all closed fan-cooled, continuous operation
- Protection class: IP44
- Insulation class: F

Application Fields

- Suitable for transferring water without abrasive particles or other liquid whose properties are similar to water.
- Widely used in industrial and urban water supply, high-rise building boosting, fire protection system, breeding

Optional Available On Request

- NSK bearing

Model Instruction

PX m 2 0 3

- 3 — Impeller number
- 20 — Rated flow
- m — Single-Phase,No"m":Three-Phase
- PX — Centrifugal pump

Performance Curve

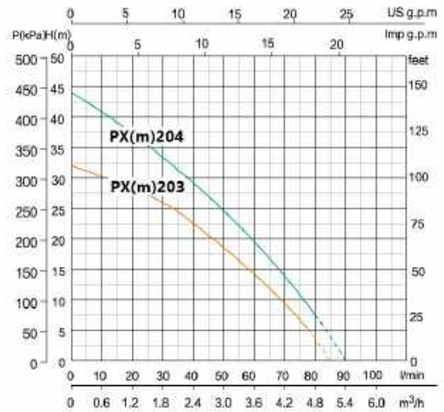

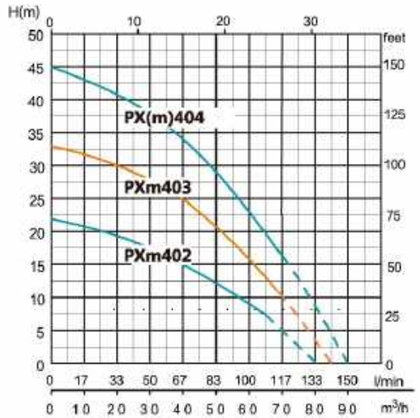

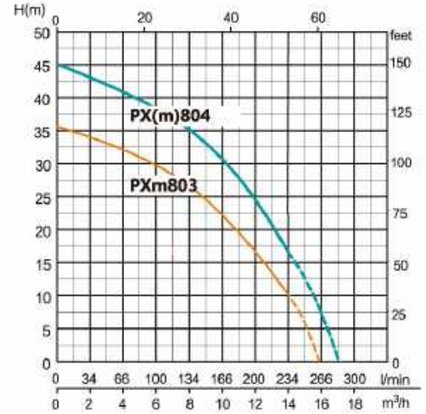

Model		Power		Max. Flow (m³/h)	Max. Head (m)	Head Range (m)	Max. Suction (m)
Single-Phase	Three-Phase	kW	HP				
PXm203	PX203	0.46	0.62	5	32	32~4	7
PXm204	PX204	0.55	0.75	5.4	44	44~4	7
PXm402	PX402	0.46	0.62	8	22	22~4	7
PXm403	PX403	0.55	0.75	8.4	33.5	33.5~4	7
PXm404	PX404	0.75	1	9	45	45~4	7
PXm803	PX803	1.1	1.5	14	36	32~4	7
PXm804	PX804	1.5	2	14	45	42~4	7

Note: No plug 0.3 m.

Components & Materials

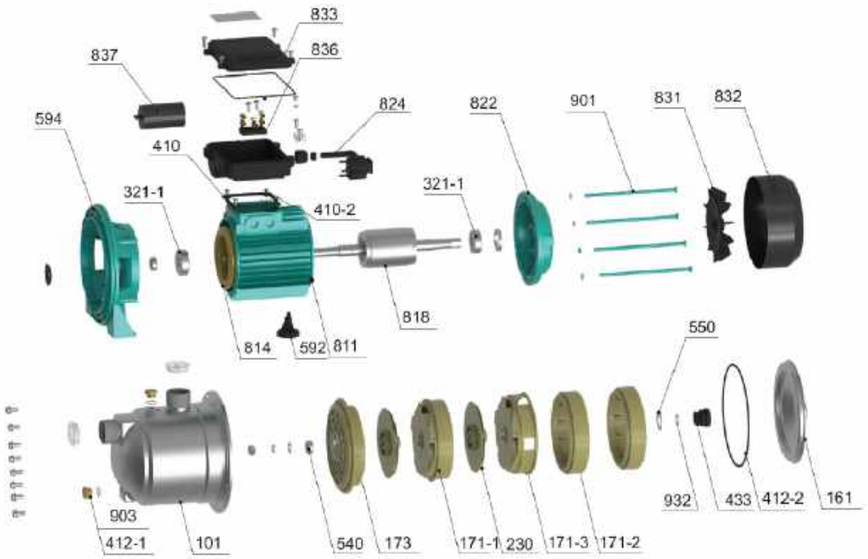

No.	Part name	No.	Part name	No.	Part name
903	Vent cock	836	Wiring terminal \ black triangle	101	Pump body
433	Mechanical seal	818	Rotor	171-3	Rear guide vane
171-1	Guide vane	831	Fan\QB70	410	Rubber gasket
901	Hexagon head bolt	173	Guide vane cover plate	822	Rear end cover
837	Running capacitor	833	Junction box assembly	540	Bushing
171-2	Guide vane washer	412-2	O-ring	832	Fan cover
594	Connector	412-1	O-ring	230	Impeller
811	Casing	321-2	Deep groove ball bearing	410-1	Rubber washer
824	Cable (domestic)	592	Foot	321-1	Deep groove ball bearing
932	Circlip for shaft	161	Pump cover	814	Stator core with winding

Model	PXm203	PXm204	PXm402	PXm403	PXm404	PX203	PX204	PX402	PX403	PX404
Capacitor(μF)	16μF/450V	18μF/450V	16μF/450V	18μF/450V	20μF/450V	/				
End cap Bearing	6202-2RZ									
Connection Part Bearing	6203-2RZ									
Motor Shaft	2Cr13									
Mechanical Seal	108-14/21 S:A(RC)									
	A:Graphite,K:Impregnated resin sintered graphite,W:;Tungsten carbide,B:Alumina ceramics,F:Fluorine rubber,P:NBR, E:Ethylene propylene rubber,T:Plating Manganese steel with chromium,C:Stainless steel(06Cr19Ni10),H:brass S: Reactive Sintered Silicon Carbide,									
Motor Case	Aluminum									
Coupling	Aluminum									
Pump Body	the stainless steel pump body									
Impeller	Plastics PPO+GF30									

Dimensions & Weight

Model	Dim.(mm)													N.W. (kg)
	DN1	DN2	L	L1	L2	L3	B	B1	B2	B3	H	H1	H2	
PX402	1"	1"	409	120	204	118	90	125	165	185	210	138	194	10
PX403	1"	1"	409	120	204	118	90	125	165	185	210	138	194	10.5
PX404	1"	1"	409	120	204	118	90	125	165	185	210	138	194	11
PX803	1.5"	1.5"	447	124	216	135	110	145	185	200	218	153	209.5	13.5
PX804	1.5"	1.5"	447	124	216	135	110	145	185	200	218	153	209.5	15
PXm402	1"	1"	409	120	204	118	90	125	165	185	210	138	194	10
PXm403	1"	1"	409	120	204	118	90	125	165	185	210	138	194	10.5
PXm404	1"	1"	409	120	204	118	90	125	165	185	210	138	194	11
PXm803	1.5"	1.5"	447	124	216	135	110	145	185	200	222	153	209.5	13.5
PXm804	1.5"	1.5"	447	124	216	135	110	145	185	200	222	153	209.5	15

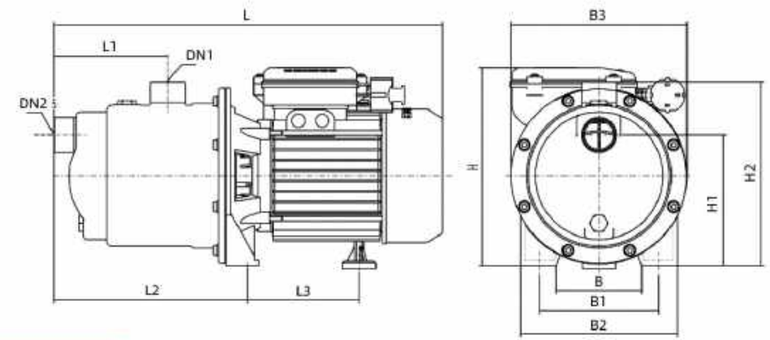

Packing Size & Weight

Model		Dim.(L×W×H) mm	G.W. (kg)	20'Loading Qty. (pcs)
Single-Phase	Three-Phase			
PXm203	PX203	460×225×255	10.5	1195
PXm204	PX204	460×225×255	11	1195
PXm402	PX402	460×225×255	10.5	1195
PXm403	PX403	460×225×255	11	1195
PXm404	PX404	460×225×255	11.5	1195

PX-203E(R)

PX-404E(R)

PX-804E

PX-E

Performance Range

Max. Flow: 14m³/h
Max. Head: 45m

Application Limits

- The conveying medium is clean water and other liquids with similar properties to water
- Medium temperature: 0~60℃ , Hot water type: 0~90℃
- The pH of the medium is between 6.5 and 8.5
- The volume ratio of solid impurities is not more than 0.1%, and the particle size is not more than 0.2mm
- The voltage is single-phase AC 220V, and the voltage fluctuation range is ±10% of the rated value.

Certificate

CE

Basic Configuration

- Synchronous motor speed: 1000 ~ 3000r/min
- Frequency: 50Hz
- Protection class: IPX5
- Insulation class: F

Application Fields

Villa water supply pressurization, community water supply pressurization, school water supply pressurization, small commercial water supply pressurization

Model Instruction

PX 4 04 E (R)

- (R) — Hot water type
- E — Frequency conversion series code
- 04 — Series
- 4 — Limited Data
- PX — Multi-stage horizontal centrifugal electric pump

Performance Curve

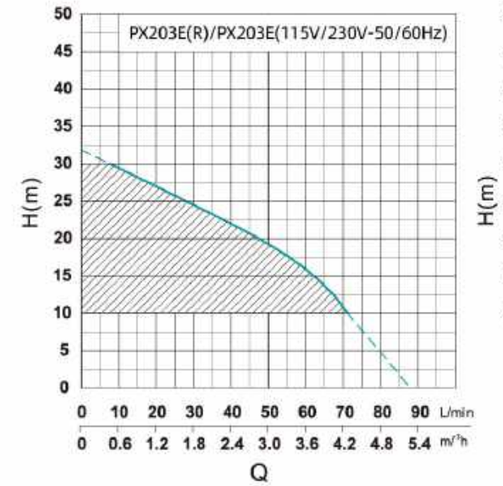

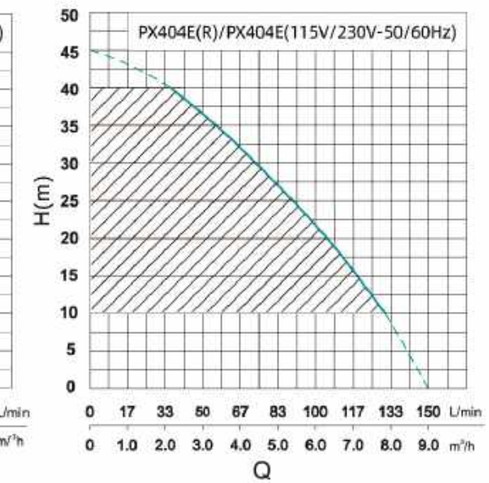

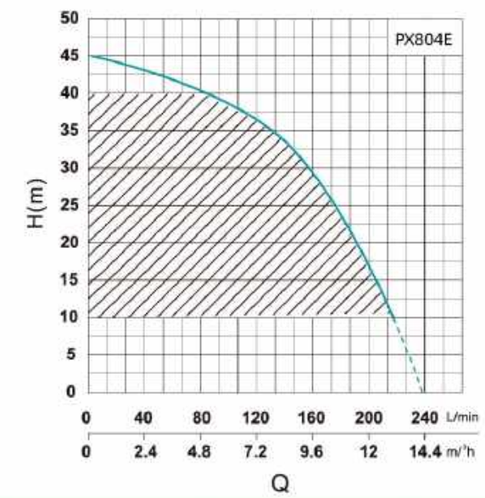

Model	Power		Max. Flow (m³/h)	Max. Head (m)	Head Range (m)	Max. Suction (m)
	kW	HP				
PX203E(R)	0.37	0.5	5	32	30~10	7
PX203E(115V230V-50/60Hz)	0.37	0.5	5	32	30~10	7
PX404E(R)	0.75	1	9	45	40~10	7
PX404E(115V230V-50/60Hz)	0.75	1	9	45	40~10	7
PX804E	1.5	2	14	45	40~10	7

Components & Materials

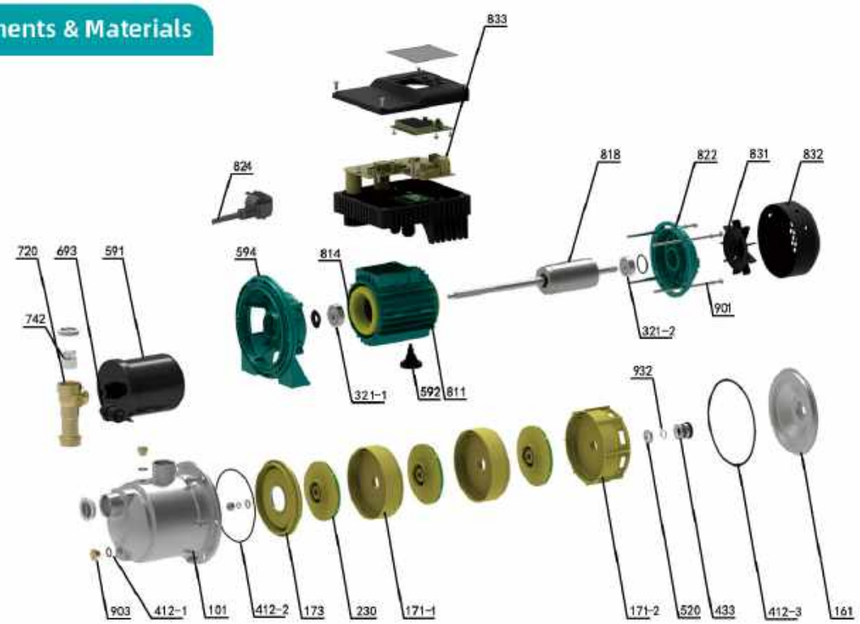

No.	Part name	No.	Part name	No.	Part name
173	Front guide vane cover plate	824	Cable (domestic)	742	Check valve
832	Fan cover	594	Connector	720	Four-way connector
811	Casing	591	Pressure tank	161	Pump cover
818	Rotor	693	Pressure sensor	433	Mechanical seal
412-1	O-ring	520	Shaft sleeve	903	Vent cock
900	Hexagon head bolt	592	Foot	814	Stator core with winding
833	PX203E variable frequency controller	101	Pump body	321-1	Deep groove ball bearing
230	Impeller	831	Fan\QB60	412-3	O-ring
171-1	Guide vane	321-2	Deep groove ball bearing	412-2	O-ring
171-2	Rear guide vane	822	Rear end cover	932	Circlip for shaft

Model	PX203E(R)	PX404E(R)	PX804E
Capacitor	/	/	/
End cap Bearing	6201-2RZ	6202-2RZ	6204-2RZ
Connection Part Bearing	6201-2RZ	6203-2RZ	6204-2RZ
Motor Shaft	420#	420#	45#+304#
Mechanical Seal	108-12/21&S:A(RC)&Static ring26	108-14/25&S:A(PC)Static ring28	108-16/25&S:A(PC)&Static ring30
Motor Case	Aluminum shell	Aluminum shell	Aluminum shell
Coupling	Aluminum	Aluminum	Aluminum
Pump Body	304#	304#	304#
Impeller	plastic	plastic	plastic

Packing Size & Weight

Model	Dim.(L×W×H) mm	N.W. (kg)	G.W. (kg)	20'Loading Qty. (pcs)
PX203E(R)	390×195×320	9.0	9.5	1151
PX203E(115V230V-50/60Hz)	415×210×320	9.5	10	1078

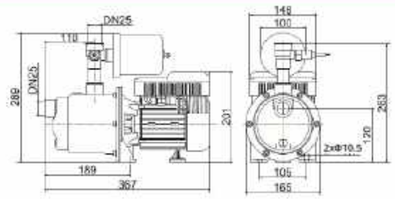

PX203E(R)

Model	Dim.(L×W×H) mm	N.W. (kg)	G.W. (kg)	20'Loading Qty. (pcs)
PX404E(R)	450×235×475	13.7	15.3	557
PX404E(115V230V-50/60Hz)	460×235×485	15.0	16.6	500

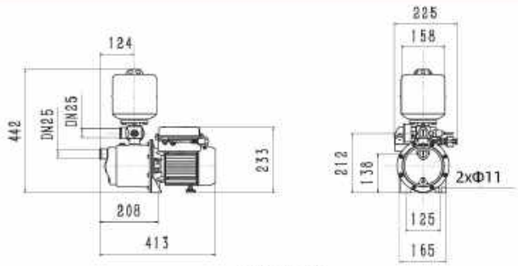

PX404E(R)

Model	Dim.(L×W×H) mm	N.W. (kg)	G.W. (kg)	20'Loading Qty. (pcs)
PX804E	510×240×530	18.8	20.7	432

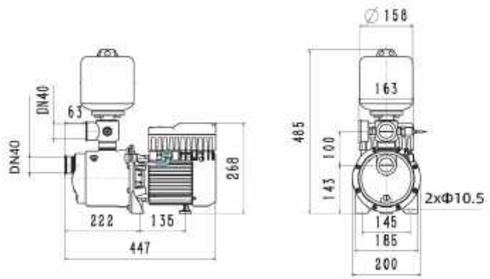

PX804E

PRm

Performance Range

- Max.head:68m
- Max.flow:6.5m³/h

Certificate

CE

Application Limits

- Max. liquid temperature 40° C
- Max. ambienttemperature 40° C
- Max. Working pressure: 6.8bar
- Voltage fluctuations should not±10% of rate value
- PH 6.5 to 8.5

Features

- Connector, intake chamber: rust preventioniron casting
- ImpellerPPO+GF30
- Pump shell 304
- Mechanical sealceramics/ graphite/NBR
- Motor2pole ,copper wire ,built-in thermal protector , fully enclosed shell
- Continuous service S1
- Enclosure class: IPX4
- Insulation class: F

Application Fields

- Domestic water supply
- Landscaping irrigation
- Water pressure boost

Optional Available On Request

- NSK bearing

Model Instruction

PR (m) 2 02

- 02 — Stages
- 2 — Rate Flow (m³/h)
- (m) — (m)Single Phase,blank marking of three phases
- PR — Multistage centrifugal horizontal pump

Performance Curve

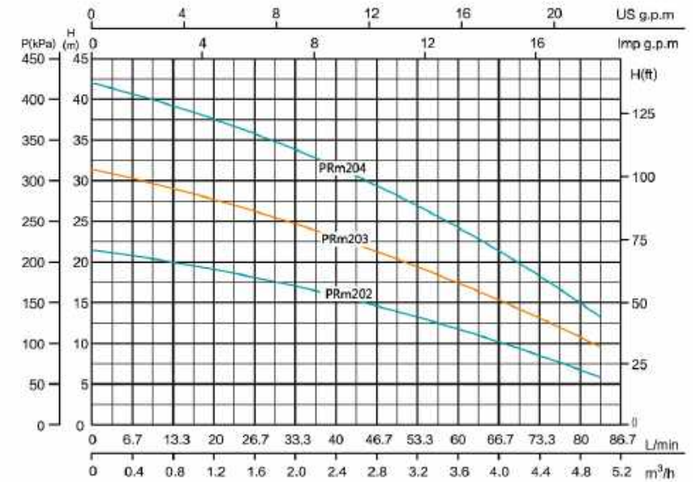

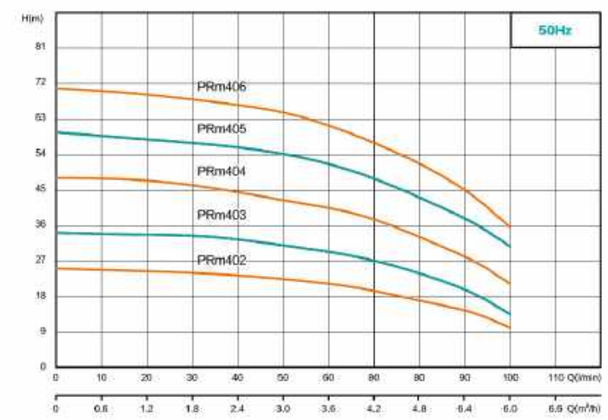

Model	Power		Max. Flow (m³/h)	Max. Head (m)	Head Range (m)	Max. Suction (m)
Single-Phase	kW	HP				
PRm202	0.31	0.4	5.4	22	22~4	7
PRm203	0.37	0.5	5.4	32	32~4.5	7
PRm204	0.55	0.75	5.4	42	42~5	7
PRm402	0.55	0.75	6.5	23	23~10	8
PRm403	0.75	1.02	6.5	34	34~12	8
PRm404	0.90	1.22	6.5	45	45~15	8
PRm405	1.10	1.50	6.5	57	57~20	8
PRm406	1.50	2.04	6.5	68	68~30	8

Components & Materials

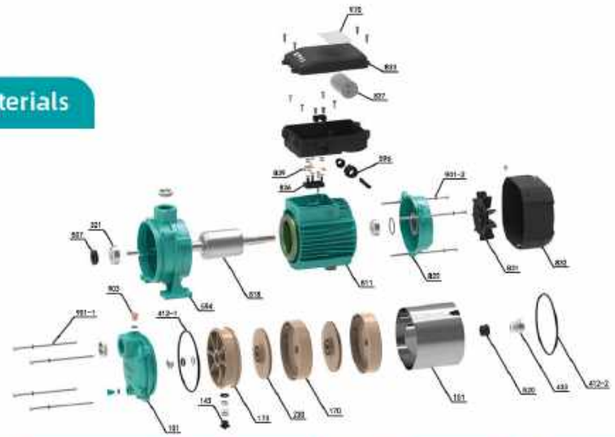

No.	Part name	No.	Part name	No.	Part name
106	Inlet pump casing	550-2	Flat washer	900-1	Cross recessed hexagon bolt
107	Connector	550-3	Wave spring	900-2	Cross recessed pan head self-tapping screw
151	Pump cylinder	550-4	Flat washer	900-3	Hexagon nut - Style 1
171	Guide vane	550-5	Spring washer	900-4	Cross recessed small pan head screw
173	Guide vane cover plate	550-6	Spring washer	900-5	Cross recessed flange screw
230	Impeller	813	Stator	900-6	Cross recessed pan head self-tapping screw
321	Deep groove ball bearing	818	Rotor	900-7	Hexagon nut - Style 1
410-1	Rubber gasket	824	Cable	900-8	Vent cock
410-2	Rubber washer	825	Cable pressing plate	900-9	Hexagon head bolt
410-3	Rubber gasket	827	Cable sheath	900-10	Slotted cheese head screw
412	O-ring	831	Fan	900-11	Cross recessed flange screw
433	Mechanical seal	832	Fan cover	955	Dust cover
507	Water retaining ring	833	Junction box assembly	970	Nameplate
520-1	Shaft sleeve	836	Wiring board	972	Earthing mark
520-2	Bushing	837	Capacitor		
550-1	External teeth lock washer	839	Wiring terminal		

Model	PRm202	PRm203	PRm204
Capacitor(μF)	15μF/450V	15μF/450V	25μF/450V
End cap Bearing	6201-2RZ	6201-2RZ	6201-2RZ
Connection Part Bearing	6201-2RZ	6201-2RZ	6201-2RZ
Motor Shaft	2Cr13		
Mechanical Seal	108-12/21 B:A(PC)		
	A:Graphite,K:Impregnated resin sintered graphite,W:;Tungsten carbide,B:Alumina ceramics,F:Fluorine rubber,P:NBR,E:Ethylene propylene rubber, T:Plating Manganese steel with chromium,C:Stainless steel(06Cr19Ni10),H:brass		
Chassis	Aluminium		
Connectting fittings	Cast Iron		
Water shell	Cast Iron		
Pump cylinder	304		
Guide vane	PP0+GF30		
The rotor	PPO+GF30		

Model	PRm402	PRm403	PRm404	PRm405	PRm406
Capacitor(μF)	15μF/450V	20μF/450V	20μF/450V	AC30μF/450V	AC40μF/450V / AC45μF/450V
End cap Bearing	6203-2RZ			6204-2RZ	6204-2RZ
Connection Part Bearing	6202-2RZ				
Motor Shaft	#420			#45+#304	
Mechanical Seal	108-16/25 & S:A(PC)Static ring 30				
chassis	YL102				
Back cover	YL102				
Coupling	HT200				
Pump barrel	#304				
Impeller	PPO				

Dimensions & Weight

Model	DN1	DN2	Dim.(mm)									N.W. (kg)
	Inch		A	B	C	D	E	F	G	H	I	
PRm202	1	1	161	210.5	212	110	74	170	140	102	150.5	7.5
PRm203	1	1	187	236.5	212	110	74	170	140	102	150.5	8.5
PRm204	1	1	213	262.5	212	110	74	170	140	102	150.5	10.5

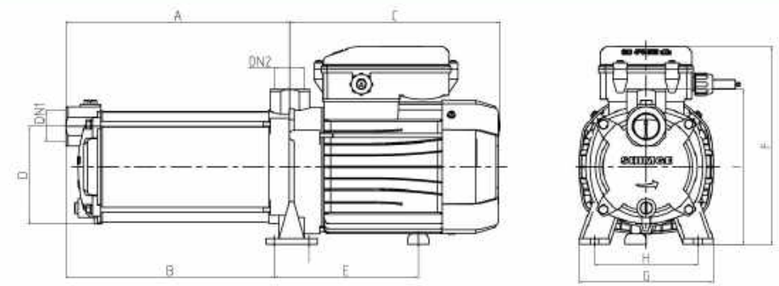

Model	DN1	DN2	Dim.(mm)									
	Inch		A	B	C	D	E	F	G	H	I	J
PRm402	1	1	171	153	222	113	144	213	155	120	170	40
PRm403	1	1	201	177	222	113	144	213	155	120	170	40
PRm404	1	1	225	201	222	113	144	213	155	120	170	40
PRm405	1	1	249	225	243	113	144	213	155	120	170	40
PRm406	1	1	273	249	243	113	144	213	155	120	170	40

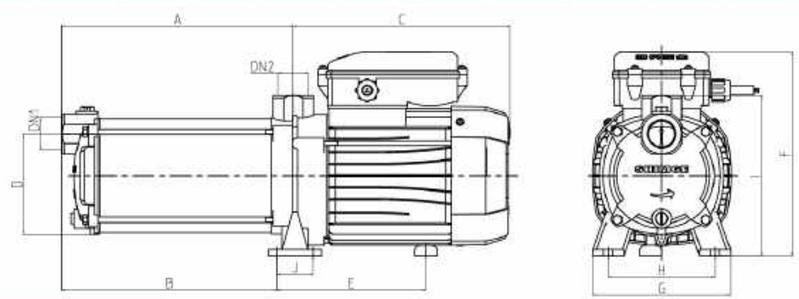

Packing Size & Weight

Model	Dim.(L×W×H) mm	G.W. (kg)	20'Loading Qty. (pcs)
PRm202	415×185×200	9.5	1512
PRm203	440×185×200	10.5	1404
PRm204	465×185×200	11.5	1296
PRm402	415×210×275	12.0	1144
PRm403	460×210×275	13.0	1120
PRm404	490×210×275	13.0	1056
PRm405	530×210×295	17.0	968
PRm406	555×210×295	19.5	896

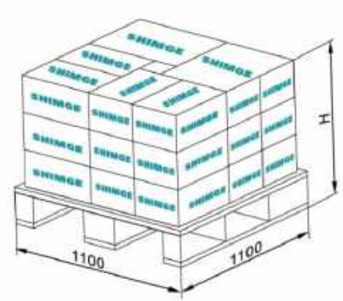

KSW

Performance Range

Max. Flow: 5.4m³/h
Max. Head: 55m

Certificate

CE

Application Limits

- Max. liquid temperature: 40° C
- Max. ambienttemperature: 40° C
- Max. running pressure: 5.5bar
- Voltage fluctuations should be within±10% of the rate value.
- PH: 6.5 to 8.5

Basic Configuration

- Connector, pump body, pump bonnet:iron castingrust prevention treatment.
- Impeller: Brass
- Shaft: 45#
- Mechanical seal: ceramics/ graphite/NBR
- Motor: 2 pole ,copper wire ,built-in thermal protector , fully enclosed shell
- Continuous service S1 motor
- Enclosure class: IPX4
- Insulation class: F

Application Fields

- Domestic water supply
- Landscaping irrigation
- Water pressure boost

Optional Available On Request

- NSK ball bearing

Model Instruction

KSW 110

- 110 — Type number
- KSW — Horizontal icon casting multi-stages centrifugal pump

Performance Curve

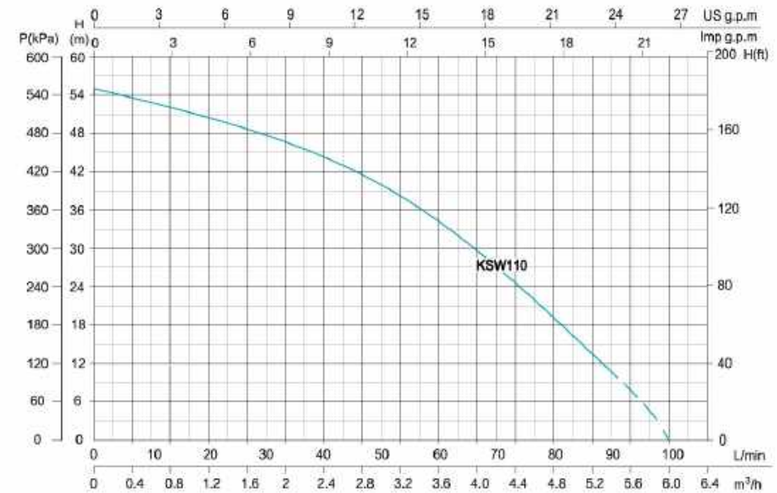

Model	Power		Max. Flow (m³/h)	Max. Head (m)	Head Range (m)	Max. Suction (m)
Single-Phase	kW	HP				
KSW110	0.9	1.2	5.4	55	40	7

Components & Materials

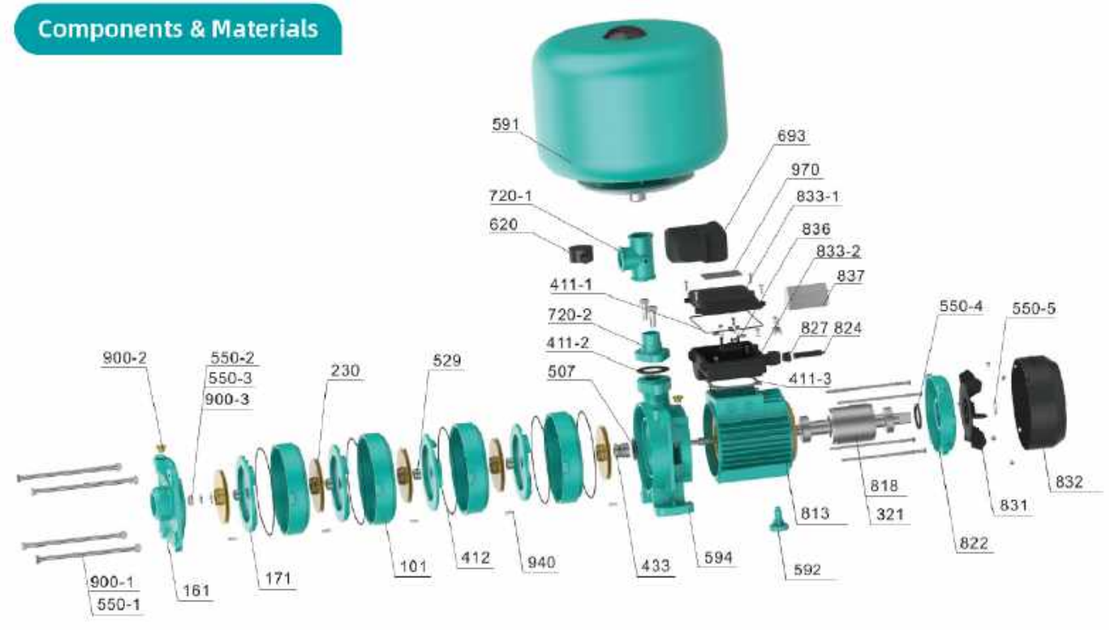

No.	Part name	No.	Part name	No.	Part name
101	Pump body	550-3	Spring washer	822	Rear end cover
161	Pump cover	550-4	Wave spring	824	Cable
171	Guide vane	550-5	Circlip for shaft	827	Cable sheath
230	Impeller	591	Pressure tank	831	Fan
321	Deep groove ball bearing	592	Foot	832	Fan cover
411-1	Rubber washer	594	Connector	833-1	Junction box cover
411-2	Rubber washer	620	Pressure gauge	833-2	Junction box
411-3	Rubber washer	693	Pressure switch	836	Wiring terminal
412	O-ring	720-1	Iron five-way connector	837	Running capacitor
433	Mechanical seal	720-2	Outlet joint	900-1	Hexagon head bolt
507	Water retaining ring	720-1	Iron five-way connector	900-2	Vent cock
529	Shaft sleeve	720-2	Outlet joint	900-3	Flat washer
550-1	Type I hexagon nut	813	Stator	940	Ordinary flat key
550-2	Type I hexagon nut	818	Rotor	970	Nameplate

Model	KSW110
Capacitor	30μF/450V
End-cover Bearing	6204-2RZ
Coupling Bearing	6204-2RZ
Motor Shaft	45 # polishing material
Mechanical Seal	108-16/25 B:A (P)(Stationary seal ring ø27)
	A:Graphite,K:Impregnated resin sintered graphite,W:;Tungsten carbide,B:Alumina ceramics(YG6),F:Fluorine rubber,P:NBR,E:Ethylene propylene rubber,T:Plating Manganese steel with chromium,C:Stainless steel(06Cr19Ni10),H:brass
Motor Bracket	Aluminum
Coupling	HT200
Pump Body	HT200
Impeller	Brass

Note:The cable length is 0.3m,no plug.

Dimensions & Weight

Model	DN1	DN2	Dim.(mm)								N.W. (kg)
	Inch		A	B	C	D	E	F	G	H	
KSW110	1	1.25	186	204	241	109.5	134	645	340	127	32

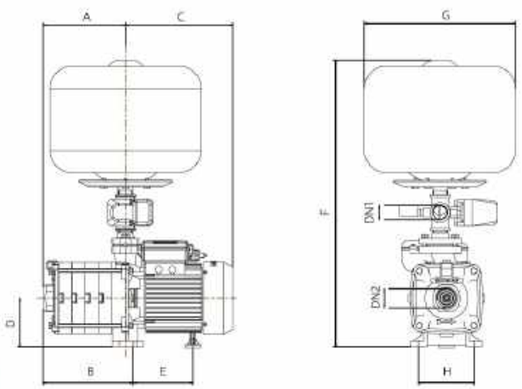

Packing Size & Weight

Model	Dim.(L×W×H) mm	G.W. (kg)	20'Loading Qty. (pcs)
KSW110	445x360x660	35	582

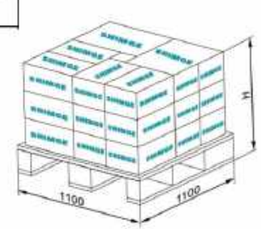

PUM-L1

Performance Range

- Max.head:32m
- Max.flow:12.6m³/h

Certificate

CE

Application Limits

- The temperature of the medium does not exceed +90℃
- The ambient temperature does not exceed +40℃
- The pH of the medium is between 6.5 and 8.5, the volume ratio of the medium containing solid impurities is ≤ 0.1%, and the particle size is ≤ 0.2mm
- The maximum working pressure is 3.2bar
- The highest altitude is 1000m

Basic Configuratian

- Back end cover: aluminum;
- Shaft: 45+304 welded shaft;
- Impeller: PPO/304
- Chassis/pump cover: YL102
- Pump body/connecting parts: HT200
- Junction box: ABS
- Mechanical seal: silicon carbide/graphite/nitrile rubber;
- Bearings: 6201-2RZ (PUM200L1), 6202-2RS(PUM400L1/600L1/750L1/751L1/1000L1)
- Motor: 2-pole asynchronous motor, copper coil, fan Cool down and run continuously
- Protection class: IPX4
- Insulation class: F

Application Fields

This series of electric pumps are small in size, light in weight, compact in structure, and simple and convenient to install. They are widely used in farmland irrigation, sprinkler irrigation, garden irrigation, vegetable greenhouse water supply and breeding industry water supply and drainage, and well water extraction.

Optional Available On Request

- NSK ball bearing

Model Instruction

PUM □ (L1)

- L1 indicates ordinary type
- Power
- Centrifugal miniature electric pump

Performance Curve

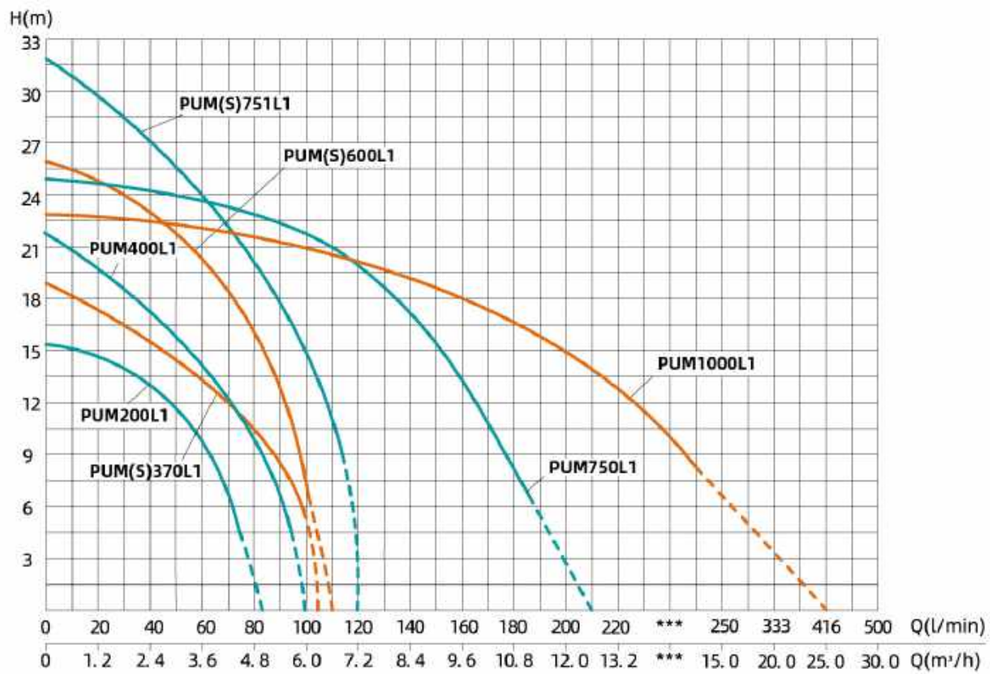

Model		Power		Max. Flow (m^3/h)	Max. Head (m)	Head Range (m)	Max. Suction (m)
Single-Phase	Three- Phase	kW	HP				
PUM200L1	-	0.25	0.3	5	15.5	15.5~4	7
PUM370L1	PUMS370L1	0.32	0.5	6	19	19~8	7
PUM400L1	-	0.37	0.5	6	22	22~8	7
PUM600L1	PUMS600L1	0.55	0.75	6.6	26	26~11	7
PUM751L1	PUMS751L1	0.75	1	7.2	32	32~14	7
PUM750L1	-	0.75	1	12.6	25	25~4	7
PUM1000L1	-	1	1.5	25	23	22~4	7

Components & Materials

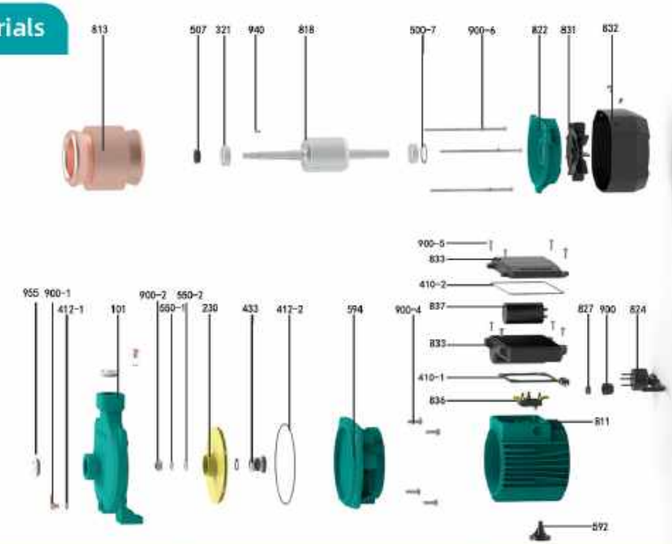

No.	Part name	No.	Part name	No.	Part name
832	Fan cover	410-2	Rubber washer	412-2	O-ring
831	Fan	837	Running capacitor	433	Mechanical seal
822	Rear end cover	833	Control box	230	Impeller
900-6	Hexagon head bolt	410-1	Rubber gasket	550-2	Flat washer
500-7	Wave spring	836	Wiring terminal	550-1	Spring washer
818	Rotor	827	Cable sheath	900-2	Style 1 hexagon nut
940	Ordinary flat type	900	Junction box nut	101	Pump body
321	Deep groove ball bearing	824	Cable	412-1	O-ring
507	Water retaining ring	811	Casing	900-1	Slotted cheese head screw
813	Stator core with winding	592	Foot	955	Dust cover
900-5	Cross recessed pan head self-tapping screw	900-4	Hexagon head bolt		
833	Control box cover	594	Connector		

Model	PUM200L1	PUM370L1	PUM400L1	PUM600L1	PUM751L1	PUM750L1	PUM1000L1
Capacitance	AC10μF\450V	AC18μF\450V	AC15μF\450V	AC18μF\450V	AC25μF\450V	AC30μF\450V	AC30μF\450V
Bearing	6201-2RS	6201-2RS	6202-2RS	6202-2RS	6202-2RS	6202-2RS	6202-2RZ
Rotor Shaft	45+304	45+304	45+304	45+304	45+304	45+304	45+304
Mechanical Seal	108-12/21&SK(EC)			108-14/25&SK(EC)			
Chassis				YL102			
Back Cover	HT200	YL102	HT200	HT200	YL102	YL102	YL102
Coupling				HT200			
Pump Body				HT200			
Impeller				PPO			

Dimensions & Weight

Model		DN1	DN2	Dim.(mm)													N.W. (kg)
Single-Phase	Three- Phase	Inch		A	B	C	E	F	G	L	ΦK	H1	H2	H3	n1-L1-B1	n2-L2-B2	
PUM200L1	-	1"	1"	/	125	167	43	35	85	268	/	76	116	176	4-14-7	2-7-27.5	7.0
PUM370L1	PUMS370L1	1"	1"	124	160	172	43	31	123	266	10	87	125	187	/	/	8.0
PUM400L1	-	1"	1"	124	160	175	43	31	123	293	10	87	125	199	/	/	9.5
PUM600L1	PUMS600L1	1"	1"	140	180	185	47	38	112	294	10	98	132	208	/	/	11.5
PUM751L1	PUMS751L1	1"	1"	140	183	186	47	39	114	296	10	103	135	213	/	/	13.5
PUM750L1	-	1.25"	1.25"	140	182	186	47	38	112	294	10	100	144	208	/	/	13.5
PUM1000L1	-	1.5"	1.5"	140	183	186	47.5	37	118	299	10	103	136	213	/	/	13.5

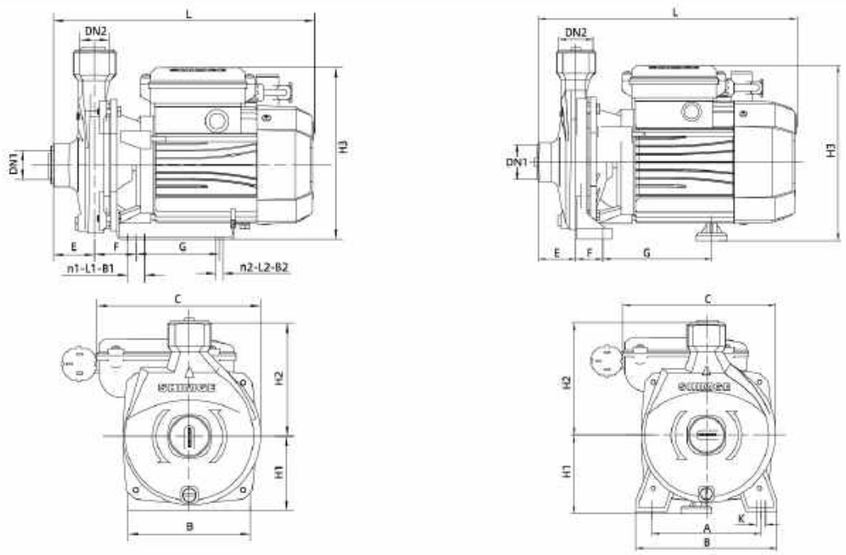

Packing Size & Weight

Model	Dim.(L×W×H) mm	G.W. (kg)	20'Loading Qty. (pcs)
PUM200L1	300×205×240	7.5	1881
PUM(S)370L1	300×205×260	8.5	1881
PUM400L1	330×210×285	10	1568
PUM(S)600L1	330×225×285	12	1456
PUM(S)751L1	330×230×300	14	1225
PUM750L1	330×230×300	14	1225
PUM1000L1	330×230×300	14	1225

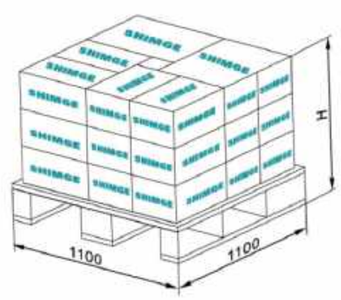

PTm

Performance Range

Max. Flow: 19m³/h
Max. Head: 10m

Certificate

CE

Application Limits

- Suction head up to 2m
- Liquid temperature up to +40℃
- Ambient temperature up to +40℃
- Max.Working pressure: 2bar
- Voltage fluctuation should not exceed 10% of rated value.
- pH: 4 to 11

Basic Configuratian

- Pump body: plastic
- Impeller: plastic
- PTm Shaft: 45# + 304
- Mechanical seal: Silicon carbide/Graphite/EPDM rubber
- Motor: 2-pole asynchronous motor, copper coil
- Protection class: IP55
- Insulation class: F

Application Fields

Suitable for conveying water containing slightly abrasive particles or other liquids with properties similar to water.
Widely used in aquaculture deodorization, pond aquaculture drainage and supporting equipment.

Optional Available On Request

- NSK bearing
- Pump cover
- PTm370 optional with 2-inch inlet and outlet

Model Instruction

PTm 250
- 250 — Specifications Code
- PTm — Aquaculture Self-Priming Circulation Pump

Performance Curve

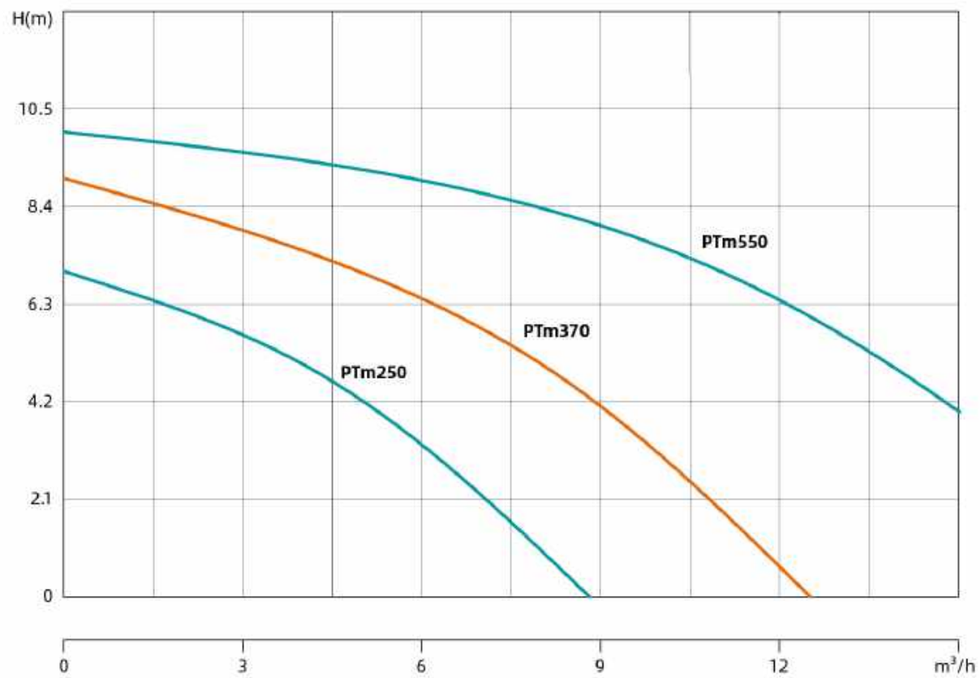

Model	Power		Max. Flow (m^3/h)	Max. Head (m)	Head Range (m)	Max. Suction (m)
Single-Phase	kW	HP				
PTm250	0.25	0.3	8.8	7	7~2	2
PTm370	0.37	0.5	12.5	9	10~2	2
PTm550	0.55	0.75	19	10	11~2	2

Components & Materials

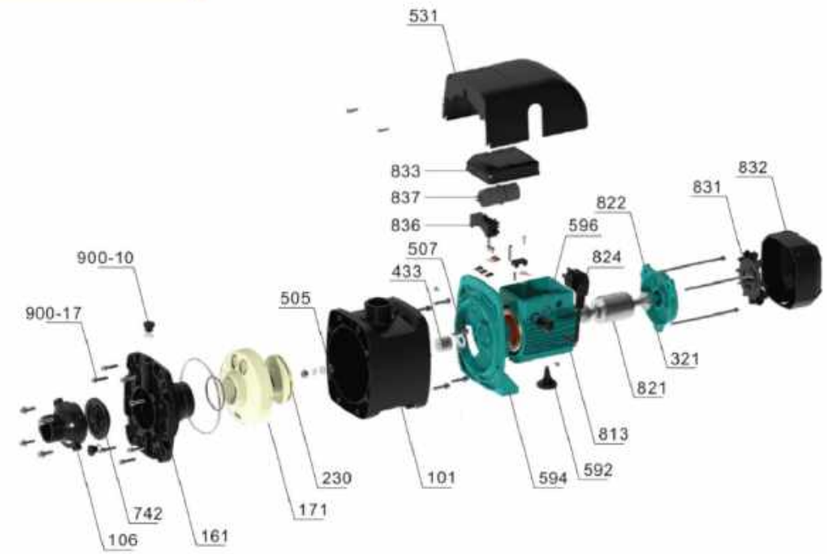

No.	Part name	No.	Part name	No.	Part name
101	Pump Body	531	Cover	831	Fan
106	Inlet	592	Base Foot	832	Fan Cover
161	Pump Cover	594	Connecting Part	833	Junction Box
171	Guide Vane	596	Cable Lock	836	Connector
230	Impeller	742	Check Valve	837	Running Capacitance
321	Deep Groove Ball Bearing	813	Stator	900-10	Air Release Plug
433	Mechanical Seal	821	Rotor	900-17	Inner Hexagon Cylinder Head Self-Tapping Screw
505	Shaft Elastic Washer	822	Back Cover		
507	Water Baffle Ring	824	Cable		

Model	PTm250	PTm370	PTm550
Capacitance	8μF\450V	12μF\450V	12μF\450V
Bearing	6201-2RZ	6201-2RZ	6202-2RZ
Rotor Shaft	45+304		
Mechanical Seal	108-12/21 & S:K(EC)		108-14/25&S:K(EC)
Motor Case	Aluminum		
Coupling	Aluminum		
Pump Body	Plastic		
Impeller	Plastic		

Dimensions & Weight

Model	DN1	DN2	Dim.(mm)								
	Inch		A	B	C	D	E	F	G	H1	H2
PTm250	1.5	1.5	443	148	221	160	90	90	100	88	133
PTm370	2	1.5	443	148	221	160	90	90	100	88	133
PTm550	2	2	476	180	258	176	100	103	120	103	155

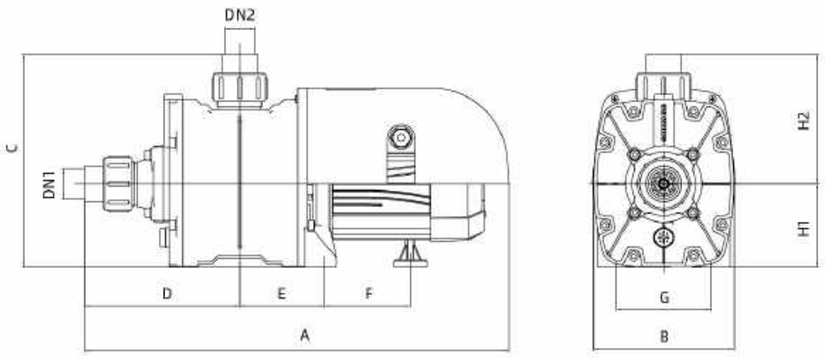

Packing Size & Weight

Model	Dim.(L×W×H) mm	G.W. (kg)	Dim.For Outer Packing(L*W*H) mm	G.W. (kg)	Packing Qty. (pcs)	20'Loading Qty. (pcs)
PTm250	515x195x245	5.0	515×195×245	6	1	1188
PTm370	515x195x245	6.0	515×195×245	7	1	1188
PTm550	560x230x285	8.5	560×230×285	10	1	800

CA200

CA600

CA1000

CA

Performance Range

Max. Flow: 7.2m³/h
Max. Head: 50m

Certificate

CE

Application Limits

- The conveying medium is clean water and other liquids with similar properties to water
- Medium temperature range 0℃ ~ +90℃ (CA1000: 0℃ ~ +60℃)
- The pH of the medium is between 6.5 and 8.5
- The volume ratio of solid impurities is not more than 0.1%, and the particle size is not more than 0.2mm
- The voltage is single-phase AC 220V, and the voltage fluctuation range is ±10% of the rated value.

Motor

- Permanent magnet synchronous motor:
  CA200 speed: 2000 ~ 5200r/min
  CA600/CA1000 speed: 2500 ~ 5200r/min
- Frequency: 50Hz
- Protection class: IP55
- Insulation class: F

Application Fields

Villa water supply pressurization, community water supply pressurization, school water supply pressurization, small commercial water supply pressurization

Model Instruction

CA 200
- 200 — Rated power
- CA — Intelligent permanent magnet variable frequency booster pump

Performance Curve

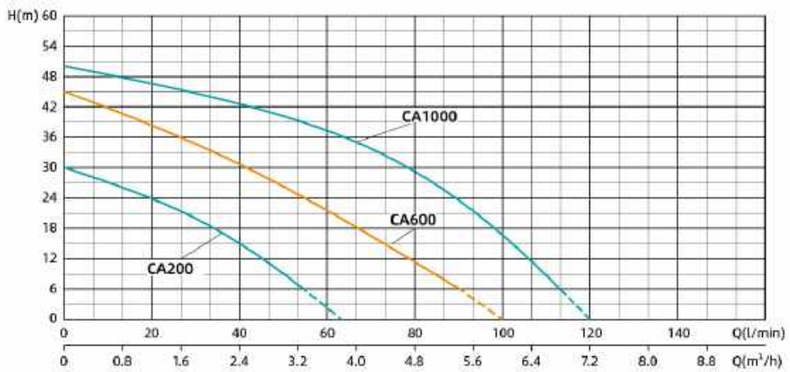

Model	Power		Max. Flow (m^3/h)	Max. Head (m)	Head Range (m)	Max. Suction (m)
	kW	HP				
CA200	0.2	0.27	3.8	30	25~4	5
CA600	0.6	0.8	6	45	40~2	6
CA1000	1	1.36	7.2	50	45~10	6

Model	CA200	CA600	CA1000
Capacitor	/	/	/
End cap Bearing	6201-2RZ	6202-2RZ	6202-2RZ
Connection Part Bearing	6201-2RZ	6202-2RZ	6202-2RZ
Motor Shaft	20Cr13	20Cr13	20Cr13
Mechanical Seal	108-12/21&S:A(RC)&Static ring26	118-14/21 static ring 28&S: K (PC)	108-14/20.5&Without mechanical sealing ring&S:K(RC)
Motor Case	Aluminum shell	Aluminum	304#
Coupling	aluminum	Cast Iron	plastic
Pump Body	plastic	Plastic patrs	plastic
Impeller	plastic	Plastic patrs	plastic

Components & Materials

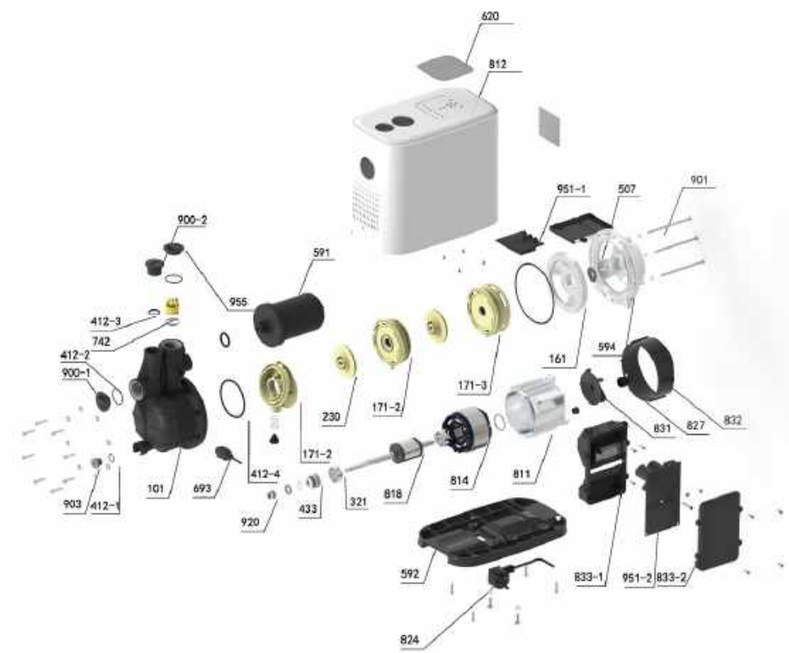

No.	Part name	No.	Part name	No.	Part name
161	Pump Cover	507	Water Deflector	832	Fan Cover
101	Pump Body	591	Pressure Tank	833-1	Terminal Box
171-2	Guide Vane	594	Connector	833-2	Terminal Box Cover
171-1	Guide Vane Cover	620	Panel Screen	900-1	Water Inlet Valve
171-3	Final Stage Guide Vane	693	Pressure Sensor	900-2	Air Release Valve
230	Impeller	742	Check Valve	901	Hexagonal Bolt
321	Deep Groove Ball Bearing	811	Motor Casing	903	Return Hole Plug
412-1	O-ring Seal Ring	812	Cover Casing	951-1	Display Panel
412-2	O-ring Seal Ring	818	Rotor	951-2	Control Panel
412-3	O-ring Seal Ring	824	Cable	955	Dust Cover
412-4	O-ring Seal Ring	827	Cable Sheath	554	Pressure Cap
433	Mechanical Seal	831	Fan		

Components & Materials

No.	Part name	No.	Part name	No.	Part name
101	Pump body	742	Check valve	595-1	Rubber pads for footing
161	Pump cove	813	Stator	595-2	Rubber pads for footing
230	Impeller	821	Rotor	621-1	Wire holder
321	Deep groove ball bearings	824	Cable	621-2	Driver board
433	Mechanical Seal	831	Fan	621-3	Control panel
505	Circlip for shaft	834	Signal cable (routing cable)	833-1	Junction box (panel box)
507	Water retaining ring	903	Backflow hole plug	833-2	Control box
526	Fan cover	950	Spring	833-3	Control box cover
531	Housing	951	Wavy spring	900-1	Junction box nut
546	Heat block	171-1	(Final class) guide vane	900-2	Water filling cock
562	Base	171-2	Guide vane	900-3	Hexagon head bolts fully threaded
591	Pressure tank	171-3	(Front) guide vane cover	900-4	Hexagon socket head screws
594	Coupling	410-1	Rubber gaskets	900-5	Vent cock
620	Touchscreen	410-2	Rubber pads	900-6	Hexagon-head bolt
693	Pressure sensor	412-1	O-ring seal	930-1	Spring gasket
697	Tube	412-2	O-ring seal	930-2	Spring gasket
698	Hall sensor	412-3	O-ring seal		

Components & Materials

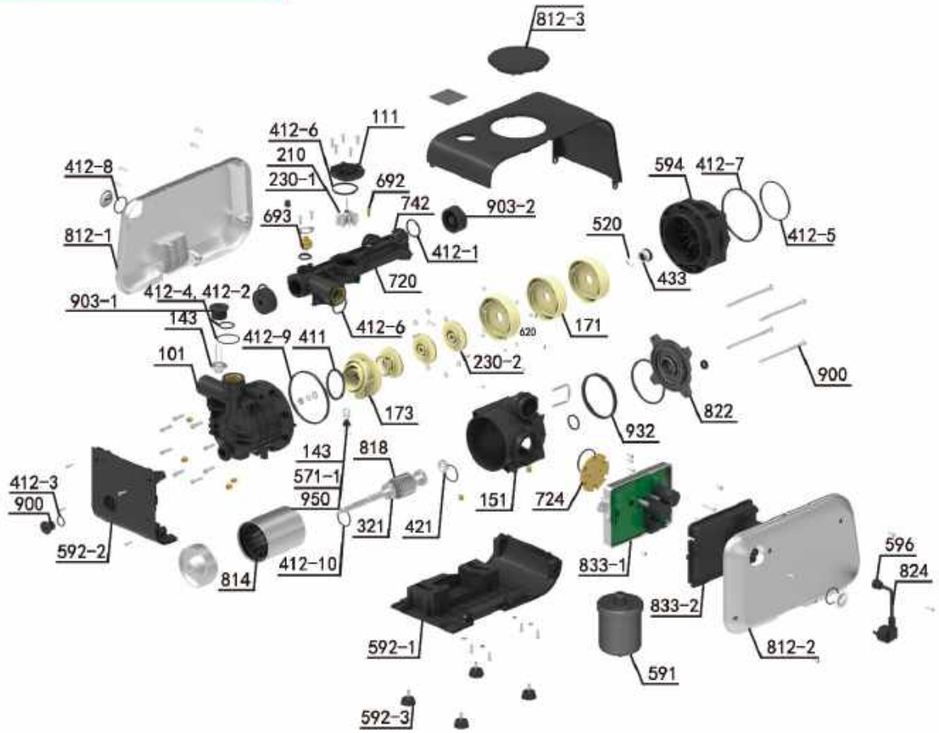

No.	Part name	No.	Part name	No.	Part name	No.	Part name	No.	Part name
812-1	Left housing	955-1	Panel sticker	143	Filter	151	Water-flowing pump body	724	Radiating plate
550-8	Pressure sensor pressing plate	620	Display panel assembly	101	Pump body	591-1	Large insert spring	833-1	Control box assembly
111	Flowmeter cover plate assembly	812-3	Panel cover	900-2	Drain cock	822	Rear end cover	833-2	Control box cover
210	Turbine shaft	594	Connector	592-2	Side base	827-2	Lead wire sheath	812-2	Right housing
230-1	Turbine assembly	171	Guide vane	411	Rubber washer	932	Backing ring	827	Cable
692	Temperature sensor	230-2	Impeller	903-3	Return hole plug	818	Rotor	591	Pressure tank
693	Pressure sensor	720	Outlet pipe fitting	950-1	Spring	814	Stator	592-3	Foot
903-2	Plug	903-1	Vent cock	591-2	Small insert spring	592-1	Base		

Packing Size & Weight

CA200

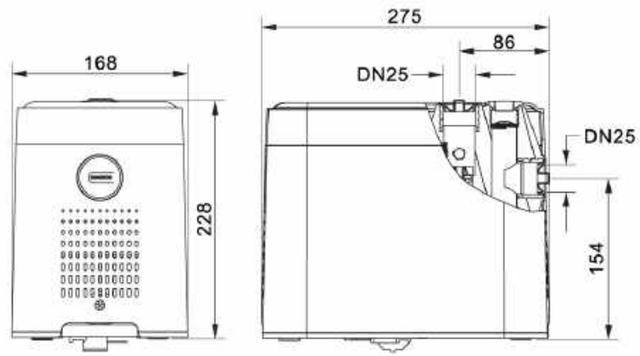

CA600

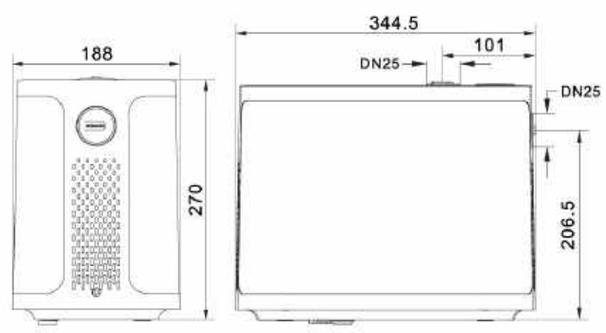

CA1000

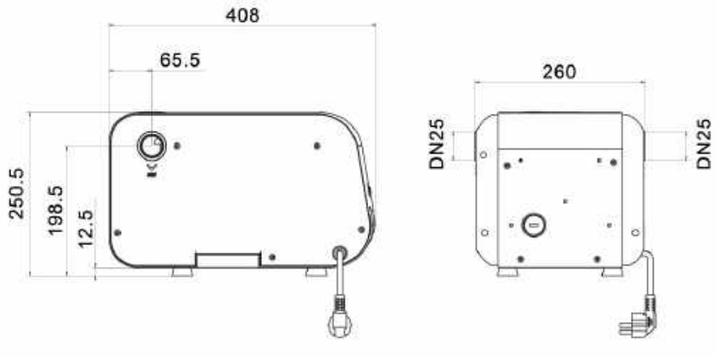

Model	Dim.(L×W×H) mm	N.W. (kg)	G.W. (kg)	20'Loading Qty. (pcs)
CA200	275×168×228	4.8	5.4	1512
CA600	344.5×188×266.5	7.3	7.4	882
CA1000	408×260×205	10.5	11.5	595

WT400-A

WT400-B

WT400-C

WT

Performance Range

Max. Flow: $8m^3/h$
Max. Head: 9m

Certificate

CE

Application Limits

- Altitude not exceeding 1000 meters.
- Liquid temperature: 1°C to +75°C
- Ambient temperature: 1°C to +40°C.
- pH: 4 to 10
- Volume ratio of solid impurities not exceeding 0.1%, with particle size not exceeding 0.2mm.

Application Fields

Suitable for transporting wastewater from showers, sinks, and enterta inment venues, as well as toilet wastewater containing toilet paper an d feces.Not suitable for materials such as sanitary napkins, condoms, hard particles, or fibrous substances.

Basic Configuration

- Insulation class: B
- Duty cycle: S3
- Whole machine protection: IPX4
- Pump barrel and pump cover: PP
- Motor shaft : 2Cr13

Model Instruction

WT 400 - A

- A: The location of the toilet connector
  - A: With positive toilet connector
  - B: With side toilet connector
  - C: Without toilet connector
- 400: Rated power
- WT: Household lifing station

Performance Curve

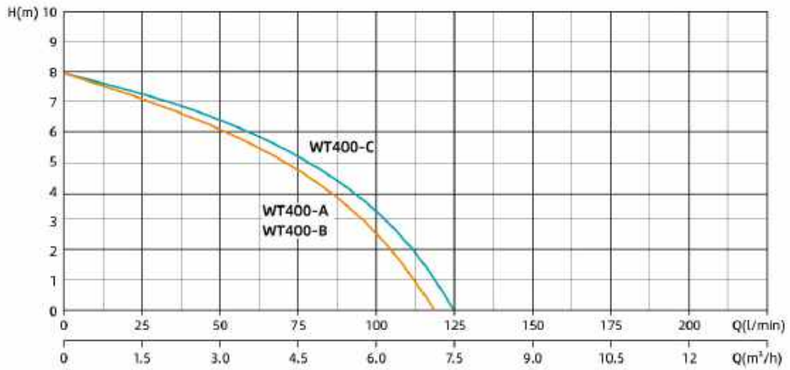

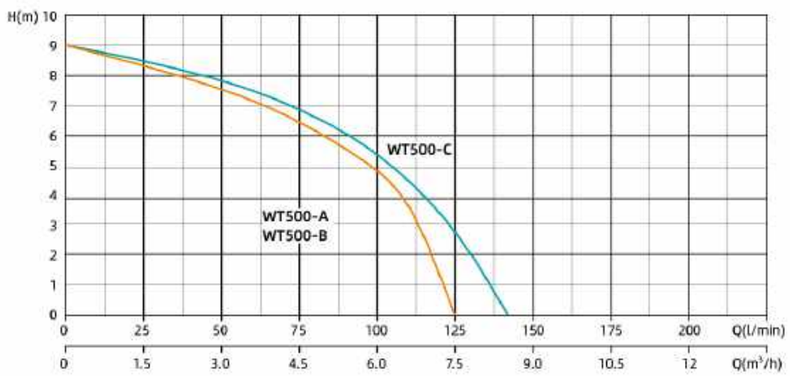

Model	Power		Max. Flow (m³/h)	Max. Head (m)	Head Range (m)	Max. Suction (m)
	kW	HP				
WT400-A	0.4	0.54	7	8	7~0	0
WT400-B	0.4	0.54	7	8	7~0	0
WT400-C	0.4	0.54	7.5	8	7.5~0	0
WT500-A	0.5	0.67	7.5	9	7.5~0	0
WT500-B	0.5	0.67	7.5	9	7.5~0	0
WT500-C	0.5	0.67	8	9	8~0	0

Packing Size & Weight

Type A

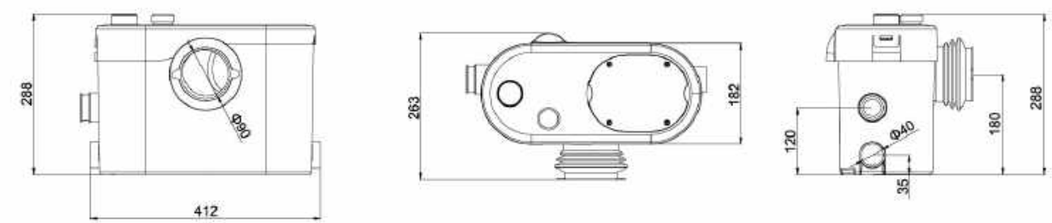

Type B

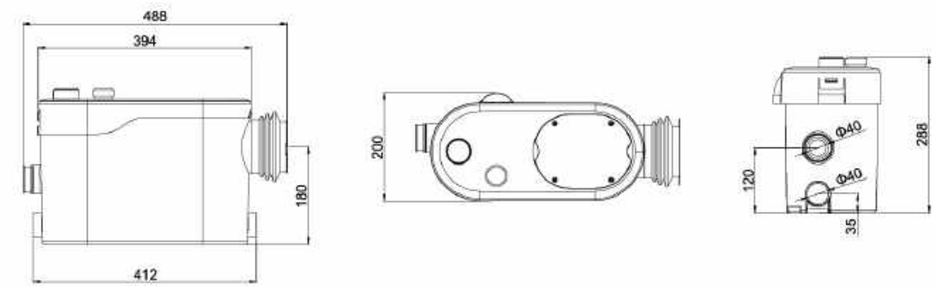

Type C

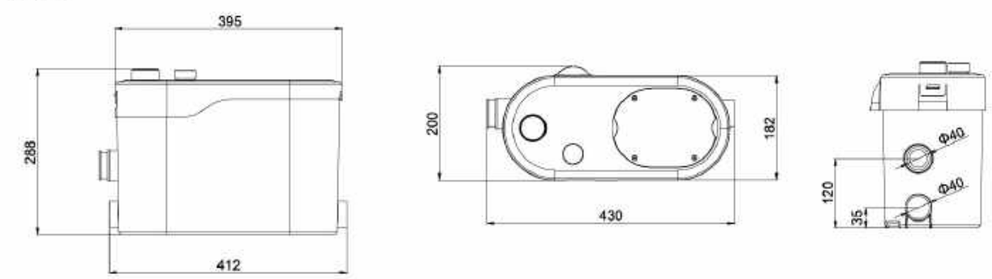

Model	DN1	DN2	N.W. (kg)
WT400-A	1x100 3x40	23/28/32/44	6.5
WT400-B	1x100 3x40	23/28/32/44	6.5
WT400-C	3x40	23/28/32/44	6.5
WT500-A	1x100 3x40	23/28/32/44	6.5
WT500-B	1x100 3x40	23/28/32/44	6.5
WT500-C	3x40	23/28/32/44	6.5

Packing Size & Weight

Model Single-Phase	Dim.(L×W×H) mm	G.W. (kg)	20'Loading Qty. (pcs)
WT400-A	480×255×330	7.5	1548
WT400-B	480×255×330	7.5	1548
WT400-C	480×255×330	7.5	1548
WT500-A	480×255×330	7.5	1548
WT500-B	480×255×330	7.5	1548
WT500-C	480×255×330	7.5	1548

JET100P

JET-L1

JET

Performance Range

Max. Flow: $6m^3/h$
Max. Head: 62m

Certificate

CE

Application Limits

- Suction head up to 9m
- Liquid temperature up to +40℃
- Ambient temperature up to +40℃
- Max. Working pressure: 6.5bar
- Voltage fluctuation should not exceed 10% of rated value.
- pH: 6.5 to 8.5

Features

- The JET type self-priming pump
- High suction, with short time
- Different impeller material configuration

Application Fields

- Suitable for transferring water without abrasive particles or other liquid whose properties are similar to water.
- Widely used in garden irrigation, vegetable greenhouse water supply, breeding industry water supply and drainage, various corollary equipment, etc.

Optional Available On Request

- NSK bearing

Model Instruction

JET (S) 750 L1

- L1: The pump body is made of cast iron (Standardized type)
- Power
- "S" indicates three-phase, and single-phase is not marked
- Jet type miniature electric pump (axial suction)

Performance Curve

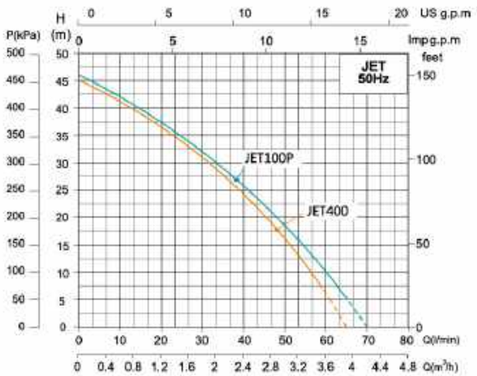

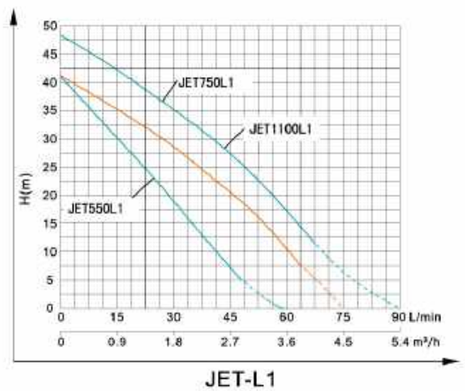

JET-L1

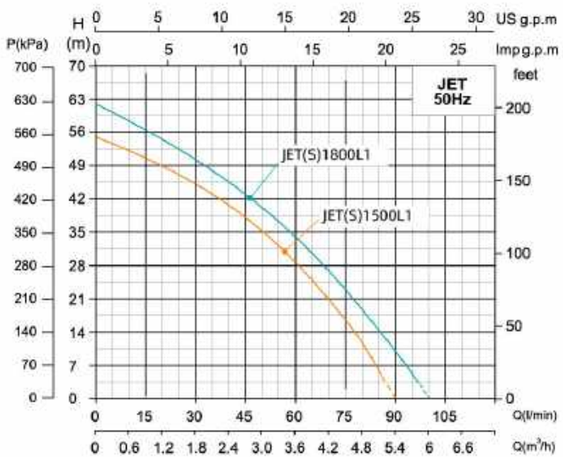

Model		Power		Max. Flow (m^3/h)	Max. Head (m)	Head Range (m)	Max. Suction (m)
Single-Phase	Three-Phase	kW	HP				
JET100P	-	0.75	1	4.2	46	46~6	9
JET400	-	0.75	1	3.9	45	45~7	9
JET550L1	-	0.55	0.75	3.6	41	41~7	9
JET750L1	-	0.75	1	4.5	41	41~7	9
JET1100L1	-	1.1	1.5	5.4	48	48~6	9
JET1500L1	JETS1500L1	1.5	2	5.4	55	55~4.5	9
JET1800L1	JETS1800L1	1.8	2.5	6	62	62~3.5	9

Note:The cable length of 0.3m, no plug.

Components & Materials

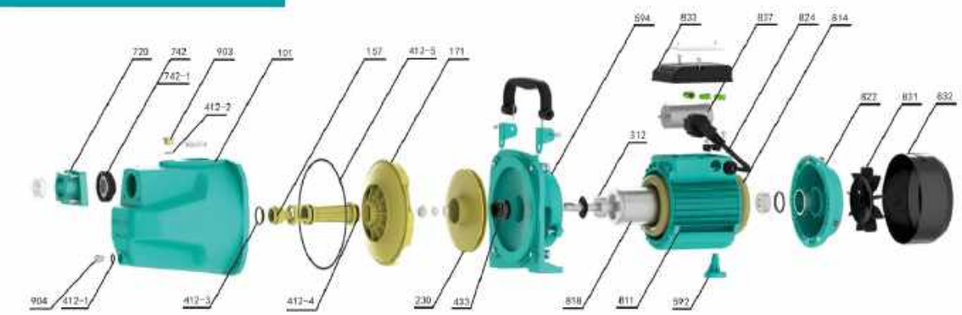

Applicable to JET series					
No.	Part name	No.	Part name	No.	Part name
720	Inlet joint	824	Cable (domestic)	433	Mechanical seal
321	Deep groove ball bearing	814	Stator core with winding	592	Foot
818	Rotor	412-3	O-ring	101	Pump body (SHIMGE)
832	Fan cover	171	Guide vane	831	Fan\QB70
837	Running capacitor	811	Casing	594	Connector
412-5	O-ring	412-2	O-ring	904	Slotted cheese head screw
903	Vent cock	157	Ejector (with nozzle)	822	Rear end cover
412-1	O-ring	833	Junction box	742-2	Check valve with filter
230	Impeller	412-4	O-ring	742-1	Valve sleeve

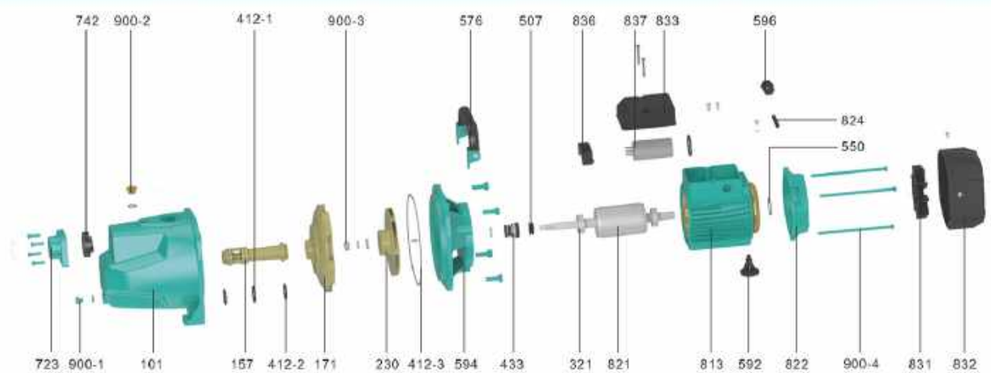

Applicable to JET-L1 series					
No.	Part name	No.	Part name	No.	Part name
101	Pump body	592	Feet	836	Terminal block
157	Ejector	594	Coupling	837	Running capacitor
171	Guide vane	596	Cable lock	900-1	Slotted cheese head screws
230	impeller	723	Inlet Festival	900-2	Hexagon head bolts full thread
321	Deep groove ball bearing	742	Check valve	900-3	Vent cock
412-1	O-ring	813	stator	900-4	Type 1 hex nut
412-2	O-ring	821	Rotor		
412-3	O-ring	822	Back cover		
433	Machinery Seal	824	Cable		
507	Retaining spring	831	fan		
550	Wave spring	832	Fan cover		
576	Handle components	833	Junction Box		

Components & Materials

Model	JET100P	JET400
Capacitor(μF)	20μF/450V	18μF/450V
End cap Bearing	6202-2RZ	
Connection Part Bearing	6202-2RZ	
Motor Shaft	AISI 304+Steel 45#	
Mechanical Seal	104-14/25 B:A (P) Stationary seal ring ø26	
	A:Graphite B:Ceramic P:NBR	
Motor Case	Aluminum	
Coupling	Cast Iron	
Pump Body	Cast Iron	
Impeller	Copper	
Guide Vane	Brass	

Model	JET550L1	JET750L1	JET1100L1	JET1500L1	JET1800L1	JETS1500L1	JETS1800L1
Capacitor(μF)	12 μF/450V	18μF/450V	25μF/450V	30μF/450V	35μF/450V	/	/
End cap Bearing	6202-2RZ			6204-2RZ			
Connection Part Bearing	6202-2RZ			6204-2RZ			
Motor Shaft	AISI304+Steel 45#						
Mechanical Seal	108-14/25 B:A (P) Stationary seal ring			108-16/25 S:A(PC) Stationary seal ring ø26.9			
	A:Graphite B:Ceramic P:NBR E:EPDM						
Motor Case	Aluminum						
Coupling	Cast Iron						
Pump Body	Cast Iron						
Impeller	304 / PPO						
Guide Vane	Plastics PPO						

Dimensions & Weight

Model		DN1	DN2	Dim.(mm)										N.W. (kg)
Single-Phase	Three-Phase	Inch		A	B	E	F	G	L	H1	H2	H3	S	
JET110P	-	1	1	180	145	143	88.5	101	220	157	29	198	11	16
JET400	-	1	1	180	145	149.5	96.5	102.5	434.5	154.5	36	198.5	11	17
JET550L1	-	1	1	140	173	132	21	172	430	147	38	204	12	13.3
JET750L1	-	1	1	140	173	132	21	172	430	147	38	204	12	14.7
JET1100L1	-	1	1	140	173	132	21	172	430	147	38	204	12	15.7
JET1500L1	JETS1500L1	1.5	1.5	207	170	173	16	212	514	172	52	238	11	23
JET1800L1	JETS1800L1	1.5	1.5	207	170	173	16	212	514	172	52	238	11	24

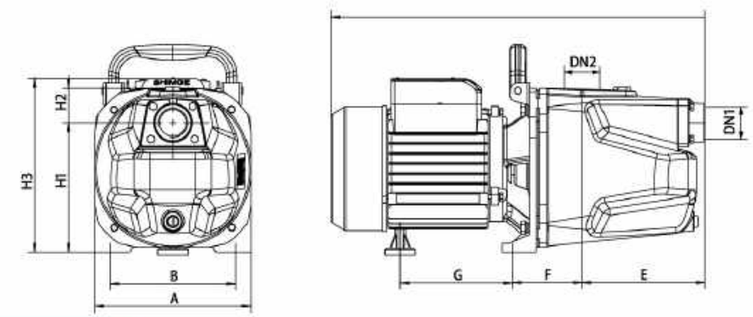

Packing Size & Weight

Model		Dim.(L×W×H) mm	G.W. (kg)	20'Loading Qty. (pcs)
Single-Phase	Three-Phase			
JET100P	-	430×210×195	16.5	1480
JET400	-	470×200×204	17.5	1606
JET550L1	-	480×205×225	14	1420
JET750L1	-	480×205×225	15.5	1420
JET1100L1	-	480×205×225	16.5	1420
JET1500L1	JETS1500L1	585×245×290	24.5	768
JET1800L1	JETS1800L1	585×245×290	26	768

SGJW-S

Performance Range

Max. Flow: 5.4m³/h
Max. Head: 52m

Certificate

CE

Application Limits

- Suction head up to 9m
- Liquid temperature up to +40℃
- Ambient temperature up to +40℃
- Max. Working pressure: 6bar
- Voltage fluctuation should not exceed 10% of rated value.
- pH: 6.5 to 8.5

Basic Configuration

- Pump body: cast iron
- Impellers: brass
- Shaft: 45 # Steel+304
- Mechanical sealing: ceramic / graphite / NBR rubber
- Motor: two asynchronous motors, copper coils, built-in thermal protection, all closed fan-cooled, continuous operation
- Protection class: IP44
- Insulation class: F

Application Fields

- Suitable for transferring water without abrasive particles or other liquid whose properties are similar to water.
- Widely used in garden irrigation, vegetable greenhouse water supply, breeding industry water supply and drainage, various corollary equipment, etc.

Optional Available On Request

- Electrophoretic pump body and connections
- NSK bearing

Model Instruction

SGJW 37 S

- S — Short
- 37 — Power 1/10(W)
- SGJW — Self-Priming

Performance Curve

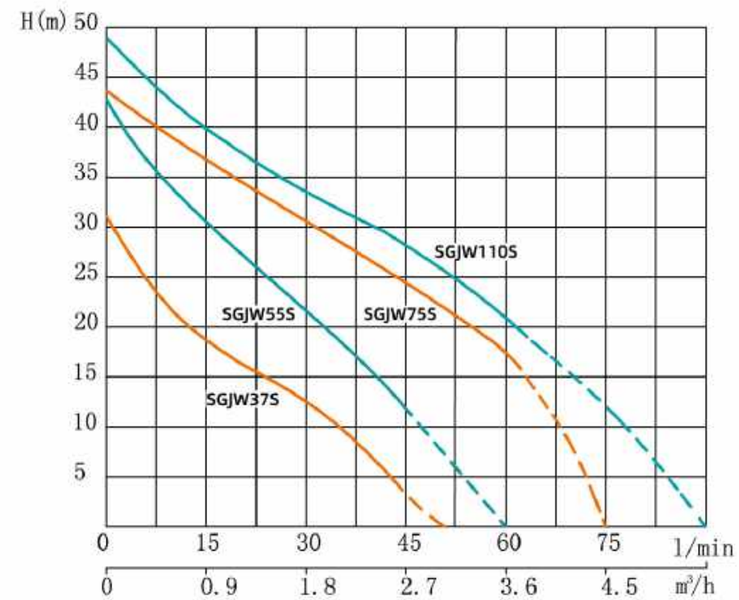

Model	Power		Max. Flow (m³/h)	Max. Head (m)	Head Range (m)	Max. Suction (m)
Single-Phase	kW	HP				
SGJW37S	0.37	0.5	3	32	32~2.5	8
SGJW55S	0.55	0.75	3.6	41	41~3	9
SGJW75S	0.75	1	4.5	45	45~4.5	9
SGJW110S	1.1	1.5	5.4	52	52~5	9

Components & Materials

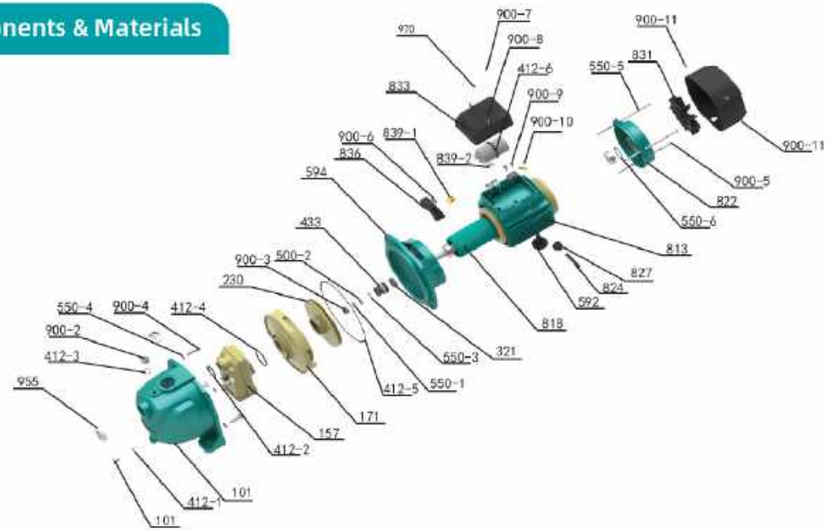

No.	Part name	No.	Part name	No.	Part name
900-1	Slotted cheese head screw	832	Fan cover	550-2	Flat washer
412-1	O-ring	900-11	Cross head pan head screw	900-3	Lock nut
101	Pump body	831	Fan blade	230	Impeller
412-2	O-ring	550-5	Spring washer	412-4	O-ring
157	Ejector	550-6	Wave spring	900-4	Hexagon head bolt
171	Guide vane	900-10	Hexagon cross recessed screw	550-4	Spring washer
412-5	O-ring	900-9	Hexagon cross recessed screw	900-2	Vent cock
550-1	Spring washer	412-6	O-ring	412-3	O-ring
550-3	Circlip for shaft	900-8	Hexagon cross recessed screw	955	Dust cover
507	Water retaining ring	900-7	Rivet		
321	Bearing	970	Nameplate		
818	Rotor	833	Junction box		
592	Foot	839-1	6.3 spring		
824	Cable	839-2	O-type closed terminal		
827	Cable sheath	900-6	Cross recessed screw		
813	Stator	836	Wiring terminal		
822	Rear end cover	594	Connector		
900-5	Hexagon head bolt	433	Mechanical seal		

Model	SGJW37S	SGJW55S	SGJW75S	SGJW110S
Capacitor(μF)	12μF\450V	12μF\450V	20μF\450V	20μF\450V
Bearing	6201-2RZ	6202-2RZ	6202-2RZ	6202-2RZ
Motor Shaft	AISI 304+Steel 45#			
Mechanical Seal	108-12/21&B:A(PC)	108-14/25&B:A(PC)	108-14/25&B:A(PC)	108-14/25&B:A(PC)
	A:Graphite B:Ceramic P:NBR			
Motor Case	YL102	YL102	YL102	YL102
Coupling	HT200	HT200	HT200	HT200
Pump Body	HT200	HT200	HT200	HT200
Impeller	HPb57-3	HPb57-3	HPb57-3	HPb57-3

Dimensions & Weight

Model	DN1	DN2	Dim.(mm)									N.W. (kg)
Single-Phase	Inch		A	B	E	F	G	L	S	H1	H2	
SGJW37S	1"	1"	112	147	83.5	19	160	343	10	113	55	8.1
SGJW55S	1"	1"	140	184	78.5	26.5	174	376	10	148	59	12.9
SGJW75S	1"	1"	140	184	78.5	26.5	174	376	10	148	59	13.6
SGJW110S	1"	1"	140	184	78.5	26.5	174	376	10	148	59	14.3

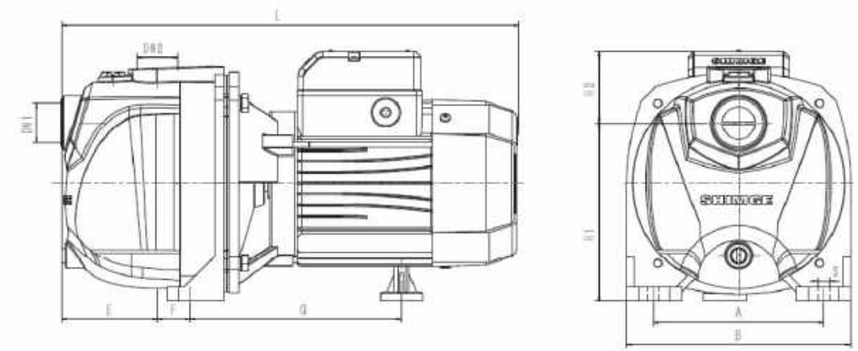

Packing Size & Weight

Model	Dim.(L×W×H) mm	G.W. (kg)	20'Loading Qty. (pcs)
Single-Phase			
SGJW37S	370x165x210	8.6	2192
SGJW55S	420x200x235	13.6	1425
SGJW75S	420x200x235	14.3	1425
SGJW110S	420x200x235	15	1425

JET-G2

Performance Range

Max. Flow: 5.4m³/h
Max. Head: 48m

Certificate

CE

Application Limits

- Suction head up to 9m
- Liquid temperature up to +40℃
- Ambient temperature up to +40℃
- Max. Working pressure: 4.8bar
- Voltage fluctuation should not exceed 10% of rated value.
- pH: 6.5 to 8.5

Basic Configuration

- Mechanical sealing: ceramic / graphite / NBR rubber
- Motor: two asynchronous motors, copper coils, built- in thermal protection, all closed fan-cooled, continuous operation
- Protection class: IP44
- Insulation class: F

Application Fields

- Suitable for transferring water without abrasive particles or other liquid whose properties are similar to water.
- Widely used in garden irrigation, vegetable greenhouse water supply, breeding industry water supply and drainage, various corollary equipment, etc.

Optional Available On Request

- NSK bearing

Model Instruction

JET (S) 370 G2

- G2 — Short Stainless Steel pump
- 370 — Type Range
- (S) — Three Phase
- JET — Self-priming

Performance Curve

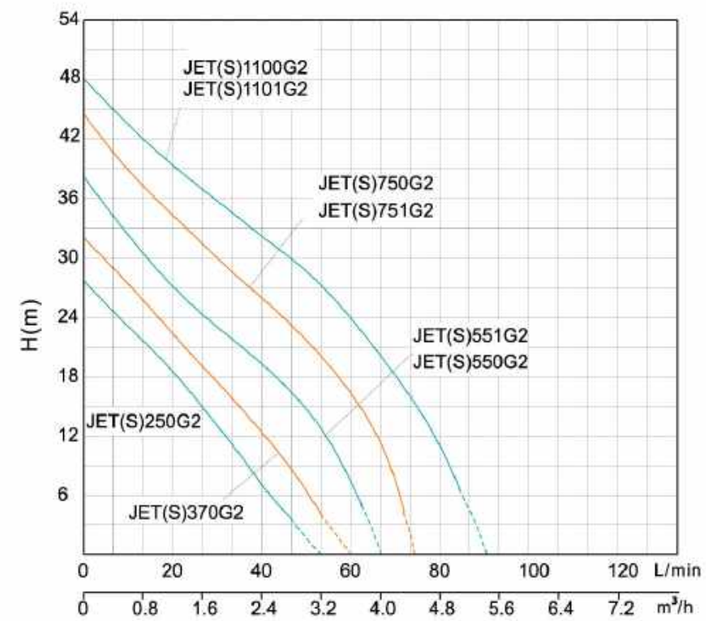

Model		Power		Max. Flow (m³/h)	Max. Head (m)	Head Range (m)	Max. Suction (m)
Single-Phase	Three-Phase	kW	HP				
JET250G2	JETS250G2	0.25	0.34	3.2	28	28~4	8
JET370G2	JETS370G2	0.37	0.5	3.6	32	32~5	7
JET550G2	JETS550G2	0.55	0.75	4	38	38~4	9
JET750G2	JETS750G2	0.75	1	4.5	44	44~5.5	9
JET1100G2	JETS1100G2	1.1	1.5	5.4	48	48~9	9
JET551G2	JETS551G2	0.55	0.75	4	38	38~4	8
JET751G2	JETS751G2	0.75	1	4.5	44	44~5.5	8
JET1101G2	JETS1101G2	1.1	1.5	5.4	48	48~9	8

Components & Materials

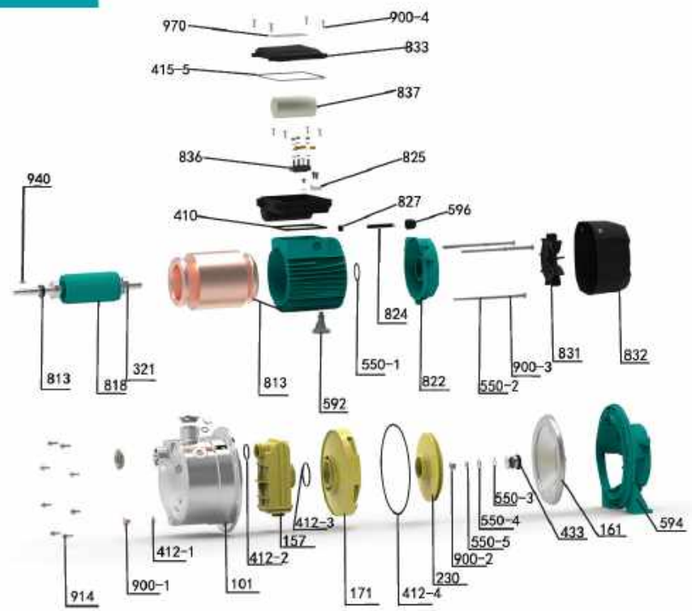

No.	Part name	No.	Part name	No.	Part name
914	Hexagonal head screw	433	Mechanical seal	321	Deep groove ball bearing
900-1	Vent cock	161	Pump cover	833	Junction box assembly
412 I 1	O-ring seal	594	Coupling	818	Rotor
101	Pump body (matte)	832	Fan cover	940	Flat key joint
412-2	O-ring seal	831	Fan	410	Rubber washer
157	Injector	900-3	Type I hexagonal bolt	836	Binding post
412 I 3	O-ring seal	550-2	Spring washer	412-5	O-ring seal
171	Guide vane	822	Rear end cover	970	Nameplate
412-4	O-ring seal	596	Cable lock	900-4	Cross recessed pan head tapping screw
230	Impeller	824	Cable	837	Capacitor
900-2	Type I hexagonal nut	550-1	Wave spring	825	Cable pressing plate
550-5	Spring washer	827	Cable sheath		
550-4	Flat washer	592	Foot		
550-3	Elastic collar for shaft	813	Stator		

Model	JET250G2	JET370G2	JET550G2	JET750G2	JET1100G2	JETS250G2	JETS370G2	JETS550G2	JETS750G2	JETS1100G2
Capacitor(μF)	12μF\450V			18μF\450V	25μF\450V	/	/	/	/	/
Bearing	6201-2RZ	6201-2RZ	6202-2RZ	6202-2RZ	6202-2RZ	6201-2RZ	6201-2RZ	6202-2RZ	6202-2RZ	6202-2RZ
Motor Shaft	304+45#	304+45#	304+45#	304+45#	304+45#	304+45#	304+45#	304+45#	304+45#	304+45#
Mechanical Seal	108-12/21&S:A(RC)		108-14/25&S:A(PC)			108-12/21&S:A(RC)		108-14/25&S:A(PC)		
Motor Case	YL102	YL102	YL102	YL102	YL102	YL102	YL102	YL102	YL102	YL102
Coupling	YL102	YL102	YL102	YL102	YL102	YL102	YL102	YL102	YL102	YL102
Pump Body	304	304	304	304	304	304	304	304	304	304
Impeller	PPO	PPO	PPO	PPO	PPO	PPO	PPO	PPO	PPO	PPO

Dimensions & Weight

Model	DN1	DN2	Dim.(mm)									N.W. (kg)
	Inch		A	B	E	F	G	L	S	H1	H2	
JET250G2	1"	1"	105	145	70	79	109	333.5	9.5	120	64.5	5.5
JET370G2	1"	1"	105	145	70	79	109	333.5	9.5	120	64.5	6
JET550G2	1"	1"	125	165	76.5	83.5	114.5	371	9.5	143	73	8
JET750G2	1"	1"	125	165	76.5	83.5	114.5	371	9.5	143	73	9.4
JET1100G2	1"	1"	145	183	76	97	109.5	379	9.5	153	68	11
JET551G2	1"	1"	125	165	76.5	83.5	114.5	371	9.5	143	73	8
JET751G2	1"	1"	125	165	76.5	83.5	114.5	371	9.5	143	73	9.4
JET1101G2	1"	1"	145	183	76	97	109.5	379	9.5	153	68	11
JETS250G2	1"	1"	105	145	70	79	109	333.5	9.5	120	59.5	5
JETS370G2	1"	1"	105	145	70	79	109	333.5	9.5	120	59.5	5.5
JETS550G2	1"	1"	125	165	76.5	83.5	114.5	371	9.5	143	59.5	8
JETS750G2	1"	1"	125	165	76.5	83.5	114.5	371	9.5	143	59.5	9
JETS1100G2	1"	1"	145	183	76	97	109.5	379	9.5	153	54.5	10.5
JETS551G2	1"	1"	125	165	76.5	83.5	114.5	371	9.5	143	59.5	8
JETS751G2	1"	1"	125	165	76.5	83.5	114.5	371	9.5	143	59.5	9
JETS1101G2	1"	1"	145	183	76	97	109.5	379	9.5	153	54.5	10.5

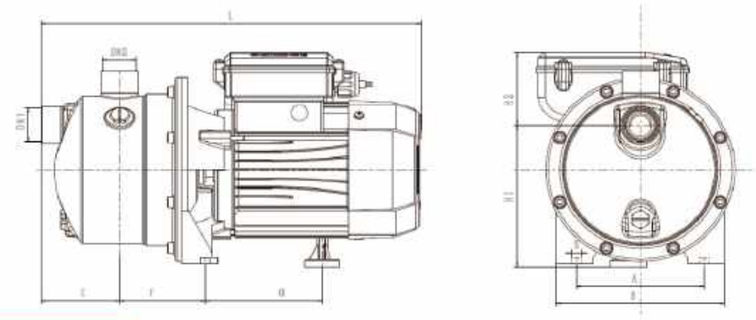

Packing Size & Weight

Model	Dim.(L×W×H) mm	G.W. (kg)	20'Loading Qty. (pcs)
JET250G2	370x210x225	6.1	1628
JET370G2	370x210x225	6.6	1628
JET550G2	410x230x265	8.8	1140
JET750G2	410x230x265	10.2	1140
JET1100G2	410x245x275	12	1017
JET551G2	410x230x265	8.8	1140
JET751G2	410x230x265	10.2	1140
JET1101G2	410x245x275	12	1017
JETS250G2	370x210x225	5.6	1628
JETS370G2	370x210x225	6.1	1628
JETS550G2	410x230x265	8.5	1140
JETS750G2	410x230x265	9.8	1140
JETS1100G2	410x245x275	11.5	1017
JETS551G2	410x230x265	8.5	1140
JETS751G2	410x230x265	9.8	1140
JETS1101G2	410x245x275	11.5	1017

PJ750M1

Performance Range

Max. Flow: 5.1m³/h
Max. Head: 30m

Certificate

CE

Application Limits

- Medium temperature: No higher than 40℃
- Ambient temperature: No higher than 40℃
- Pump body Max. Pressure: 0.6Mpa
- The PH value of the medium is between 6.5 and 8.5, the volume ratio of solid impurities in the medium is ≤ 0.1%, and the particle size is ≤ 0.2mm
- Voltage fluctuation: No more than ±10% of the rating

Basic Configuration

- Pump body: HT200;
- Guide vane: PPO;
- Shaft: 45#
- Connection: HT200
- Chassis/rear cover: YL102
- Mechanical seal: pressureless sintered silicon carbide/graphite/nitrile rubber
- Motor: two-pole asynchronous motor, copper coil, with thermal protector
- Protection class: IP44
- Insulation class: F

Application Fields

- Injection pumps of PJ series, featured by small flow, high pressure, strong self-priming, can be widely applied to water-intake way for domestic usage, garden irrigation, pressurization for tap water, well water pumping and aquaculture.

Model Instruction

PJ 750 M1

- M1 — M-Newest PJ model
- 750 — Matched power(W)
- PJ — Injection-type electric pump

Performance Curve

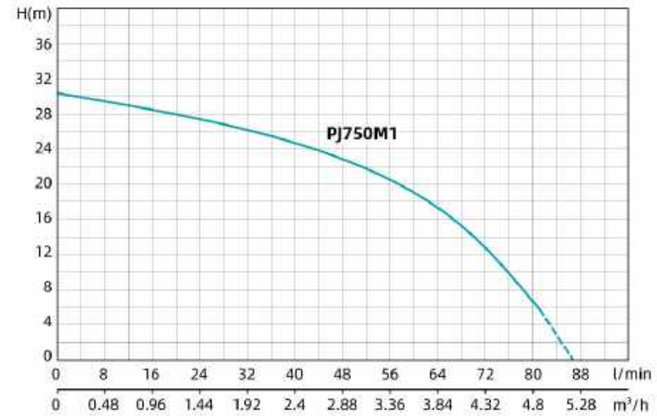

Model	Power		Max. Flow (m³/h)	Max. Head (m)	Head Range (m)	Max. Suction (m)
Single-Phase	kW	HP				
PJ750M1	0.75	1	5.1	30	30~10	8

Components & Materials

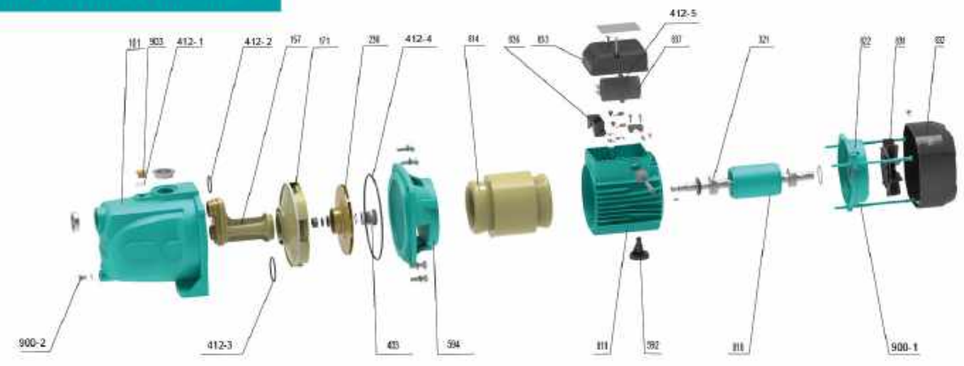

No.	Part name	No.	Part name	No.	Part name
101	Pump body	230	impeller	837	Running capacitor
412-1	O-ring	433	Machinery Seal	814	Stator core with windings
412-2	O-ring	900-1	Hexagon head bolts	811	chassis
412-3	O-ring	594	Coupling	592	Feet
412-4	O-ring	594	Coupling	818	Rotor
412-5	O-ring	822	Lower bearing block	321	Deep groove ball bearing
903	Vent cock	832	Fan cover	900-2	Slotted cheese head screws
157	Ejector	831	fan	836	Terminal block
170	Guide vane	833	Junction Box		

Model	PJ750M1
Capacitor	AC20μF/450V
End-cover Bearing	6202-2RZ
Coupling Bearing	6202-2RZ
Motor Shaft	45#
Mechanical Seal	301-14/21 B:A (P)(Stationary seal ring ø28)
	A:Hot pressed graphite,B:Reation sintered silicon carbide,P:Nitrile rubber,C:Stainless steel(06Cr19Ni10)
Motor casing	Aluminum
Coupling	Aluminum
Pump Body	HT200
Guide vane	PPO
Impeller	HPb57-3

Dimensions & Weight

Model	DN1	DN2	Dim.(mm)									N.W. (kg)
Single-Phase	Inch		A	B	E	F	G	L	H1	H2	H3	
PJ750M1	1"	1"	125	167	125	151	173	420.5	131	45	202	12.0

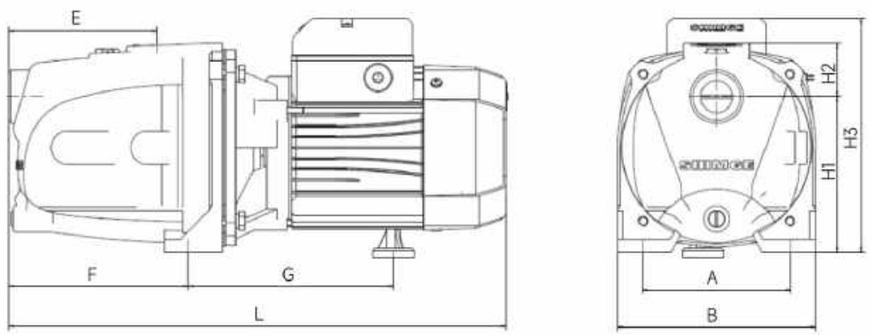

Packing Size & Weight

Model	Dim.(L×W×H) mm	G.W. (kg)	20'Loading Qty. (pcs)
PJ750M1	455×205×235	12	1400

Model	Dimension (cm)
VC-19L	27×27×40
VC-24L	27×27×46

Model	Dimension (cm)
VS-23L	33×33×33
VS-24L	36×36×34

Model	Dimension (cm)
HC-24L	31×28×40
HC-36L	38×36×43
HC-50L	55×36×38
HC-60L	48×46×49
HC-80L	48×46×60
HC-100L	48×46×68

Model	Dimension (cm)
VCF-60L	46×46×65
VCF-80L	46×46×76
VCF-100L	46×46×85

Model	Connection
3-way	1"
4-way	1"
5-way	1"

PS-02A	PS-02B	PS-02C
1.4-2.8 bar	1.4-2.8 bar	1.4-2.8 bar
2.1-3.5bar	2.1-3.5bar	female/male
2.8-4.3bar	2.8-4.3bar	
female/male	3.5-5.6bar	
	4.9-7.2bar	
	female/male	

SIZE \ Model	PG-P	PG-SS	PG-S
40mm	PG-40	PG-SS 40	PG-S 40
50mm	PG-50	PG-SS 50	PG-S 50

THREE TYPES OF SHELL: (1) PG-P:plastic (2) PG-SS:stainless steel (3) PG-S:steel
THE CONNECTIONS HAVE TWO TYPES: (1)G 1/4" (2)M10x1
FOR 40MM GAUGE,THE SCALE IS 0-10 BAR OR 0-6 BAR

TWO TYPES OF CONNECTIONS: A:BACK CONNECTION B:BOTTOM CONNECTION FOR 40MM GAUGE, THE SCALE IS 0-6 BAR

Model	VOLTAGE	CURRENT	AMBIENT TEMPERTURE
FLO-1	220V-240V	8A	0-80℃
FLO-2	220V-240V	8A	0-80℃

Model	VOLTAGE	FREQUENCY	CURRENT	CONNECTIONS	PROTECTION
PS-01	220V-240V 110V-115V	50/60Hz	10A	1"×1"	IP 65

Model	VOLTAGE	FREQUENCY	CURRENT	CONNECTIONS	PROTECTION
PS-01A	220V-240V 110V-115V	50/60Hz	10A	1"×1"	IP 65

Model	VOLTAGE	FREQUENCY	CURRENT	CONNECTIONS	PROTECTION
PS-01B	220V-240V 110V-115V	50/60Hz	12A	1"×1"	IP 65

Model	VOLTAGE	FREQUENCY	CURRENT	CONNECTIONS	PROTECTION
PS-01C	220V-240V 110V-115V	50/60Hz	12A	1"×1"	IP 65